ChemShare®

1969 TO 1989

20 YEARS OF EXCELLENCE BY DESIGN

JANUARY, 1990

DESIGN II℠ & CHEMTRAN® NEW FEATURES UPDATE

ChemShare

P.O. Box 1885
Houston, Texas 77251-1885
713/627-8945
TWX: 910-881-2793
FAX: 713/965-0968

Dear Friends:

As we enter the 1990's, ChemShare is proud to be celebrating 20 years of service to the world's process industries. This accomplishment would not have been possible without the much appreciated support of our Customers and the commitment and expertise of our employees, Agents and Distributors.

It seems a long time back to 1969 when our founders, Frank Canfield and Mike McGuire, then at the University of Oklahoma, first started the ChemShare Corporation. As in many new businesses, the initial years were more challenging than expected! However, they taught us that focusing on our Customers' needs for high quality simulation products backed up with excellence of technical service are the best foundation for future growth.

As many of you are aware, ChemShare has a long tradition of committing major investments for new products and enhancing existing ones. Our customer-driven strategy has positioned us strongly to serve you better in today's globally competitive environment. Our "feature-rich" DESIGN II flowsheet simulator operates on all hardware platforms from the PC, engineering workstations, minicomputers to mainframes. And our technology is helping thousands of engineers in oil-gas, refining, petrochemicals and other process industries to design and operate more profitable plants.

We are entering the era of the powerful "Personal Simulator" right on your desk. This will open up new opportunities for increased design and plant optimization. The economic benefits of lower plant capital and operating costs easily justify each process engineer having our field-proven DESIGN II 386. Plus, our new pricing approach meets the needs and budget of every type of organization from the individual engineering consultant right up to the globally integrated oil company.

For the 1990's, ChemShare has re-dedicated itself to providing outstanding value to our greatest asset...you, our Customers. We are very proud to announce the next release of DESIGN II. This release, Version 5, and its new technical capabilities reemphasize our commitment to defining the standards for process design software. Plus we are also very pleased to announce a new version of the world's foremost property prediction system, ChemTran.

Thank you for the opportunity to provide "20 years of excellence by Design". We look forward eagerly to meeting your needs into the 21st century.

Please enjoy our latest ChemShare news with our compliments.

Sincerely yours,

Kevin Jones

Kevin Jones
Senior Vice President
Worldwide Sales/Marketing

VERSION 5.0 AT A GLANCE

Announcing DESIGN II Version 5.0 and ChemTran Version 15.0

DESIGN II Version 5.0 and ChemTran Version 15.0 provide new capability that extend the application range of ChemShare's simulation products and provide user flexibility to increase engineering productivity. ChemShare offers the best value available to the process industries by providing robust, rigourous, and accurate simulation solutions at a reasonable price.

The ChemShare New Features Update includes all the technical documentation required to apply the new features contained in DESIGN II Version 5.0 and ChemTran Version 15.0. If you require any further explanations please contact the ChemShare Technical Service department.

DESIGN II: New Features

Version 5.0 contains the following new features. Detailed descriptions of these new features begin on page 1.

- **Case studies** (see page 1)
- **High pressure non-ideal thermodynamics** (see page 6)
- **Flow meter unit operations** (see page 12)
- **Electrolyte thermodynamics** (see page 24)
- **UNIFAC LLE method** (see page 37)

DESIGN II: Enhancements

In addition to new features, many enhancements have been made to DESIGN II in Version 5.0. These enhancements are described beginning on page 39.

- **Refine column improvements** (see page 39)
- **Heat exchanger improvements** (see page 43)
- **UNIFAC VLE parameter updates** (see page 51)
- **Crude stream characterization improvements** (see page 54)
- **Compressor enhancements** (see page 57)
- **Flash enhancements** (see page 58)
- **Inline FORTRAN** extensions (see page 59)
- **General flowsheet enhancements** (see page 74)

ChemTran: New features and enhancements

ChemTran Version 15.0 includes several new features and enhancements. Details of these new capabilities begin on page 78.

- **High pressure non-ideal thermodynamics** (see page 78)
- **Electrolyte thermodynamics** (see page 78)
- **UNIFAC update** (see page 78)
- **Physical property output** (see page 79)

ChemShare Corporation
P.O. Box 1885
Houston, Texas 77251-1885

Phone: (713) 627-8945
Fax: (713) 965-0968
Hot Line: (713) 621-7003

ChemShare Process Systems, Ltd.
Brook House, Church Street
Wilmslow, Cheshire SK9 1AT England

Phone: (625) 532-113
Hot Line: (625) 530-503
Fax: (625) 535-001

TABLE OF CONTENTS

New DESIGN II Capability

Case Study 1

High Pressure Non-Ideal Thermodynamics 6

Flow Meter Unit Operation 12

Electrolyte Thermodynamics 24

UNIFAC LLE Activity Coefficient Estimation Method 37

DESIGN II Enhancements

Refine Column Improvements 39

Heat Exchanger Improvements 43

UNIFAC VLE Update 51

Crude Stream Characterization and Properties Extension 54

Compressor Enhancements 57

Flash Enhancements 58

Inline FORTRAN Extensions and Enhancements 59

General Flowsheet Enhancements 74

ChemTran Enhancements

High Pressure Non-Ideal Thermodynamics 78

Electrolyte Thermodynamics 78

UNIFAC Update 78

Physical Property Output 79

CASE STUDY

Overview

An engineer often needs to run a number of simulation cases in order to assess the sensitivity of a flowsheet to changes in variables, or to produce a number of design cases.

The CASe study facility allows multiple simulations to be performed in one run. Results analysis are presented in data tables and plots.

This has the effect of reducing both the engineering and computer time required.

Flowsheet Case Study Commands

CASe Study Input Section

Case study commands are entered in the DESIGN II input file according to the following guidelines.

- The CASe study section **must** be the last section in the input. The only exception is that the FORTRAN library may follow the CASe study section.
- Only one CASe study section is allowed.
- Comment lines, beginning with "**C-**" may appear anywhere within the section.
- No Inline FORTRAN is allowed in the section.

Input Command Summary

To begin your CASe study section use the CASe study command. The CASe study section has seven basic commands:

CASe study

CASe block, NAMe =

CHAnge, change variable, REStore

STEp, step variable, INCrement = , LIMit = , REStore

TABle, table variable, LABel =

PLOTX, plot variable, LABel =

PLOTY, plot variable, LABel =

All input commands have the following rules:

- Characters shown in CAPitals are the minimum recognizable keywords which must be entered.
- The primary keyword (CASe block, CHAnge, STEp, TABle) must begin a new line.
- Commands may be spread over multiple lines. A new line may begin wherever a comma would be inserted. A line may not begin with an equipment module identifier.
- Variables are coded in the same way as in the standard input with the exception of multiple value variables. An example of a multiple value variable is the pressure of a three stage compressor. To refer to a particular value of a multiple value variable it is necessary to refer to the value's position. The third pressure a multi-stage compressor is specified with the syntax PRE STA 3.

DESIGN II Keyword Commands

CASe Study

This command is required to begin the CASe study section of the input and is used only once per flowsheet.

CASe Block

The CASe block command marks the beginning of a new input case. The case may be labeled with the NAMe = command. Up to 16 alphanumeric characters may be used for the label. Each CASe block may specify any number of flowsheet parameter changes. All parameter changes will be implemented and the entire flowsheet is recalculated with the new parameter setting. There is no limit to the number of CASe blocks that may be used.

CHAnge

The CHAnge command is used to modify the value of a parameter in the flowsheet. A list of valid parameters is given in Table 6 (page 61). The syntax is as follows:

CHAnge, module/stream nnn, parameter = value

The CHAnge command may optionally be followed by the REStore keyword. This has the effect of restoring the parameter value to its original value, after the current case is completed. Units of measure may be supplied with the parameter where appropriate.

Note: Stream parameter CHAnges should only be done on **feed** streams.

Any number of CHAnge commands may appear in a CASe block.

CHAnge command examples:

CHAnge, COMPREssor 5, PREssure OUT = 200, REStore

STEp

The STEp command is a convenient way to specify a series of cases where a parameter is being varied in a systematic fashion. The STEp command is equivalent to specifying a series of CASe blocks with CHAnge commands.

The list of valid parameters is the same as for the CHAnge command and is given in Table 6 (page 61). The syntax is as follows:

STEp, module/stream nnn, parameter = value, INCrement = value, LIMit = value

This generates a set of cases, with the parameter being incremented by the amount specified for each successive case until the specified limit is exceeded. If the increment is negative, the limit becomes a lower limit. There is a limit of 10 cases that may be run with a single STEp command.

The command may optionally be followed by the REStore keyword. This has the effect of restoring the case parameter to its original value after the STEp sequence has completed.

Units of measure may be supplied with the initial value for the parameter. These units will be applied to the increment and limiting value as well.

STEp command example:

STEp, COMPREssor 5, PREssure OUT (psia) = 200, INCrement = 20, LIMit = 300, REStore

Note: Only one STEp command per CASe block is allowed. CHAnge commands may be used in the same CASe block as the STEp command, and will be in effect for each increment of the STEp command.

In addition, care should be taken not to cause conflicts by changing the same parameters with both the CHAnge and STEp commands.

TABle

The TABle command allows the user to build a comparative table for case studies. All variables which occur in CHAnge or STEp statements will automatically be reported in the table. The user may add to this list by using the TABle command. The list of valid parameters is identical to the parameters available to Inline FORTRAN and are called using the same keywords that are used by Inline FORTRAN. See Table 6 (page 61) for a complete listing.

The syntax is as follows:

TABle, module/stream nnn, parameter, LABel =

The LABel may consist of up to 16 alphanumeric characters and is optional.

The TABle command need be supplied only once for a variable, even if there are multiple CASe blocks, since the variable will be reported for all the cases in all the CASe blocks. The command may appear anywhere in the CASe study section.

It is also possible to use the TABle command if no CASe blocks are specified. This is an easy way to get a compact summary of key variables.

Table command examples:

TABle, COMPREssor 5, CALculated WORk, LABel = K101 WORK

PLOTX and PLOTY

The PLOTX / PLOTY commands allow the user to graph the changes in one variable against another. The PLOTX command defines the independent variable and the PLOTY the dependent variable. Up to four dependent variables (PLOTY) may be plotted on the same graph and each must have the same dimensional units. The same parameters are available to the PLOT commands as are available to the TABle command.

The syntax is as follows:

PLOTX, module/stream nnn, parameter, LABel =

PLOTY, module/stream nnn, parameter, LABel =

Note: Up to four (4) PLOTY commands are allowed.

The LABel may consist of up to 16 alphanumeric characters and is optional.

Multiple graphs may be defined by additional PLOTX / PLOTY commands.

Examples:

PLOTX, COMPREssor 5, PREssure OUT, LABel = K101 PREssure OUT
PLOTY, COMPREssor 5, CALculated WORk, LABel = K101 WORK

PLOTX, STReam 7, FLOw, LABel = PURGE RATE
PLOTY, STReam 7, FLOw COMponent 4, LABel = METHANE LOSS
PLOTY, STReam 7, FLOw COMponent 5, LABel = ETHYLENE LOSS

Note: When generating multiple plots, the dependent variables (y) will be grouped with the appropriate independent variable (x) as they are sequentially listed in the input file. When a PLOTX variable is specified, all subsequent PLOTY variables will appear on the same plot until another PLOTX command appears.

Guidelines

CASe studies, by their nature, tend to produce extremely large output files. Unless the detailed information is required, use the GENeral section PRInt SWItch = 3 and PRInt STReam = NONe options to reduce the volume of output.

There is an overall limit of 25 cases that may be specified in one run. There will normally be one case per CASe block, however, if a STEp command is used , a CASe is run for each increment. There is also a limit of 10 cases that may be generated from one STEp command. This is to prevent a poor specification from effectively causing an infinite loop.

CASe study uses the converged solution from one run as the starting point for the next. Because of this, it is advantageous to arrange the case studies in such a way that the step from one case to the next is as small as possible, since this will reduce the amount of computer time required and increase the likelihood of convergence.

Note also that variables which are changed in the CASe study section must be specified in the input and should not be calculated or derived quantities, since the change will be destroyed when such a quantity is recalculated. Note also that the type of specification made on a unit may not be changed - for example, the temperature out of an isothermal FLAsh may be altered, but the FLAsh type may not be changed to adiabatic.

HIGH PRESSURE NON-IDEAL THERMODYNAMICS

Overview

Choosing an appropriate thermodynamic method to adequately predict vapor liquid equilibria for high pressure non-ideal systems has in the past presented difficult tradeoffs. An activity coefficient method can model liquid phase behavior well but does a poor job in the vapor phase, conversely, an equation of state method can predict the vapor phase well but does a poor job modeling non-ideal liquid phases. Making a choice has always been a compromise.

ChemShare's DESIGN II Version 5.0 and ChemTran Version 15.0 includes a new equation of state method that predicts the liquid phase with the accuracy of the activity coefficient method. This method is a ChemShare modified Peng-Robinson equation of state based on the work of Stryjek et al. (1).

Application

This new method is applicable to non-ideal chemical systems at high pressure. Its advantages are that it has improved ability to predict vapor pressures for polar and associating compounds and an improved ability to regress VLE data.

Theory

A new equation of state has been implemented in the DESIGN II and ChemTran programs for the modeling of chemical systems at pressures higher than those for which the vapor phase can be assumed to be ideal. This equation of state is intended for determining both liquid and vapor phase fugacities and is an alternative to the mixed K-value models which employ an activity coefficient model in conjunction with a standard state fugacity correlation for determining liquid phase fugacity coefficients and an equation of state for determining vapor phase fugacity coefficients.

This new equation of state is a modification of the Peng-Robinson equation and is based upon the work of Stryjek et al. (1). Their work consisted of two modifications to the standard Peng-Robinson formulation. The first modification is to the attractive energy term of the Peng-Robinson equation for pure components. The modification is obtained by enhancing the temperature dependence of the term, α, which multiplies the attractive energy parameter, a.

Peng-Robinson Equation of State

$$P = \frac{RT}{V - b} - \frac{a\,\alpha}{V^2 + 2\,V\,b - b^2} \qquad (1)$$

$(V+b)^2 - 2b^2$, or $(V+b)(V-b) + 2Vb$

Standard Peng-Robinson

$$\alpha = [\,1 + (\,0.37464 + 1.54226\,\omega - 0.26992\,\omega^2\,)\,(\,1 - Tr^{0.5}\,)\,]^2 \qquad (2)$$

Stryjek Modified Peng-Robinson

$$\alpha = [\,1 + K\,(\,1 - Tr^{0.5}\,)\,]^2 \qquad (3)$$

Stryjek et al. claim that the modification allows accurate reproduction of vapor pressure data for a variety of substances including nonpolar, polar nonassociating and associating compounds.

In addition to the modification to the attractive energy term, a new composition dependent mixing rule has been added for this equation of state. This requires the correlation of two interaction parameters per binary pair. For strongly nonideal systems, this new mixing rule can result in an order of magnitude improvement in the fit of vapor-liquid equilibrium (VLE) data.

ChemShare determined that there are regions of the phase map for which the Stryjek modification of the Peng-Robinson equation is significantly less accurate than the standard Peng-Robinson equation. ChemShare, therefore, derived additional proprietary modifications to overcome these inaccuracies.

The ChemShare implementation defines

$$K = f\,(K_0, K_1, K_2, K_3, \text{Temperature})$$

where

$$K_0 = 0.37464 + 1.54226\,\omega - 0.26992\,\omega^2$$

and

K_1, K_2, and K_3 are terms calculated from a vapor pressure data regression.

Owing to these proprietary ChemShare modifications, the kappa parameters published by Stryjek and Vera are not applicable. The user must regress pure component vapor pressure data with ChemTran to calculate the kappa parameters for each component. If pure component vapor pressure data is not regressed, the equation of state will default to the standard Peng-Robinson equation.

The modified Peng-Robinson equation can be used with either of two binary mixing rules. The first mixing rule is the standard binary mixing rule presented in any thermodynamic text. Using the standard mixing rule, the attractive energy term for the binary is defined as follows:

$$a\alpha = \sum_i \sum_j x_i\, x_j\, (a\alpha)_{ij}$$

$$a\alpha_{ij} = (1 - k_{ij})\,\sqrt{(a\alpha)_i\,(a\alpha)_j}$$

The second (new) mixing rule is similar in form to the Margules activity coefficient model and takes its name from that equation. The attractive energy term is defined as:

$$a\alpha_{ij} = (1 - x_i\, k_{ij} - x_j\, k_{ji})\,\sqrt{(a\alpha)_i\,(a\alpha)_j}$$

DESIGN II Commands

Parameters for the modified Peng-Robinson equation of state are passed from ChemTran to DESIGN II through the chemical file. If no chemical file is present or if there is data missing for any of the components in the chemical file, the modified Peng-Robinson equation will default to the standard Peng-Robinson form.

DESIGN II Keyword Commands

MOD PEN K - Specifies Modified Peng Robinson equation of state. A chemical file is required. If the chemical file containing Kappa parameters is not specified, this will default to standard PENK.

MOD PEN H - Specifies the Modified Peng Robinson method for enthalpy.

MOD PEN D - Specifies densities are to be calculated with the modified Peng-Robinson equation of state.

EOS MIX = STD (default) Specifies standard mixing rule

EOS MIX = MAR Specifies Margules mixing rule

Note: The same EOS MIX method must be specified in both DESIGN II and ChemTran.

ChemTran Keyword Commands

The following steps show the procedure to regress vapor pressure and mixture data with ChemTran to calculate the kappa and the binary interaction parameters. All ChemTran keywords are capitalized.

Step 1 - Specify the Modified Peng-Robinson Equation of State

MOD PEN K (option) - Specifies the modified Peng-Robinson equation of state developed by ChemShare.

The options for use with the MOD PEN K keyword are:

STD - use the standard mixing rule (Default)
MAR - use Margules non-symmetric mixing rule

Step 2 - Define Kappa Parameters

Kappa parameters can be defined in one of two ways. First, they can be entered directly,

KMODPEN (DAT) i = K_0, K_1, K_2, K_3

They may also be determined by regressing vapor pressure data with ChemTran.

KMODPEN (VAP) i

When this option is used, the kappa parameters will be fit to either P-T data if entered or the vapor pressure curve from ChemShare's component library for component i will be used.

If the KMODPEN command is omitted, the kappa parameters will default to the form of the standard Peng-Robinson equation.

Step 3 - Specify or Regress Binary Interactions

The binary interaction parameters can entered directly,

MOD PEN i,j = A_{ij}, A_{ji}, B_{ij}, B_{ji}

Enter interaction parameters for the modified Peng-Robinson equation which have been regressed in earlier ChemTran runs or which are starting estimates of the values to be regressed.

These interaction parameters may also be determined by regressing vapor liquid equilibrium data. See section 3.0 of the ChemTran User's Guide for instructions on how to regress vapor liquid equilibrium data.

ChemTran Example Input

The following example shows how ChemTran is used to regress CO2/water VLE data to the modified Peng-Robinson method:

```
AB123.
*WATER/CO2 REGRESSION WITH MODIFIED PENG ROBINSON METHOD
C-
C-          WATER CO2
COMPONENTS = 62, 49
C-
C-  SPECIFY MODIFIED PENG ROBINSON EQUATION OF STATE WITH MARGULES MIX RULE
C-
MODPENK(MAR)
C-
C-  SPECIFY REGRESSION OF KAPPA PARAMETERS FROM LIBRARY VAPOR PRESSURE DATA
C-
KMODPEN (VAP)62
KMODPEN (VAP)49
C-
C-  REGRESS VLE DATA
C-
P-X-Y(BAR,K)49,62 = 383.15, 99.999,.0140,.9560
                           199.997,.0210,.9580
                           299.995,.0240,.9480
                           399.994,.0260,.9320
                           499.992,.0280,.9140
                           599.991,.0300,.8930
                           699.990,.0315,.8720
                           799.988,.0330,.8540
                           899.986,.0345,.8400
                          1499.997,.0400,.8000
P-X-Y(BAR,K)49,62 = 423.15, 99.999,.0135,.8800
                           199.997,.0215,.9100
                           299.995,.0260,.9000
                           399.994,.0290,.8820
                           499.992,.0320,.8620
                           599.991,.0345,.8400
                          1499.977,.0480,.7520
P-X-Y(BAR,K)49,62 = 473.15, 99.999,.0130,.7150
                           199.997,.0260,.8200
                           299.995,.0340,.8250
                           399.994,.0410,.8160
                           499.992,.0470,.8000
                           599.991,.0520,.7800
                           999.985,.0630,.7200
P-X-Y(BAR,K)49,62 = 543.15,599.991,.1060,.5460
                           699.990,.1250,.5200
                           799.988,.1450,.4960
                           899.986,.1660,.4620
                          1299.982,.2880,.2880
END
```

References

1. Stryjek,R. and Vera, J. H., *Canadian Journal of Chemical Engineering*, vol. 64, 1986

FLOW METER UNIT OPERATION

Overview

Version 5.0 includes a new Flow Meter unit operation. This model is applicable to the orifice type flow meter and allows the engineer to calculate the size of the orifice, flow rate of the stream, or the pressure drop across the orifice. Additionally, this model can provide tables and parametric plots of flow rate verses pressure drop. The flow condition can be single or two phase in the subsonic region and vapor phase only in the sonic flow region.

The model allows square-edge, quadrant, and conical type orifice plates. The International Standard Organization method and the American Gas Association methods are available to correlate discharge coefficient and expansion factor for square-edged orifice. This model can accommodate flange, corner, radius, or pipe orifice taps. See Figure 1 and Figure 2 for illustrations of orifice and tap types.

Background Theory

Single Phase Flow in the Subsonic Region

The orifice meter flow equation used in this case is:

$$Q = \frac{C}{[1 - \beta^4]^{0.5}} Y \frac{\pi}{4} d^2 [2 g_c \rho_f \Delta P]^{0.5}$$

where C discharge coefficient

Y expansion factor

β ratio of orifice diameter to measured meter pipe diameters

d orifice diameter

g_c dimensional conversion constant

ΔP differential pressure across orifice

ρ_f density of the fluid flowing

Q mass flow rate

The reference for computing discharge coefficient and expansion factor are given in Table 1.

Two phase flow in the subsonic region (Reference 5)

The orifice meter equation used in this regime is:

$$Q = \frac{K_g Y_g \frac{\pi}{4} d^2 \sqrt{2 g_c \rho_g \Delta P}}{(1 - y) + 1.26\, y \frac{K_g Y_g}{K_L} \sqrt{\frac{\rho_g}{\rho_L}}}$$

where $K_L = C_l / (1 - \beta^4)^{0.5}$

$K_g = C_g / (1 - \beta^4)^{0.5}$

y liquid fraction,

ΔP differential pressure across orifice

ρ_g density of gas phase

ρ_L density of liquid phase.

Vapor Phase Flow in the Sonic Region (Reference 1)

The orifice meter flow equation used in this regime is:

$$Q = 0.6098863\, Cd^2\, Y_{cr} \sqrt{\frac{G}{T_{f1}}}\; F_{tp}\, P_{f1}$$

where Y_{cr} expansion factor at critical flow,

G gas specific gravity, (molecular weight of gas) / (molecular weight of air)

F_{tp} factor correcting static pressure to total pressure,

P_{f1} upstream pressure,

T_{f1} upstream temperature.

DESIGN II Keyword Commands

Specify the Flow Meter Unit Operation

FMTR — Specifies the Flow Meter unit operation. One inlet stream and one outlet are allowed.

Specify the Flow Meter Configuration

ORIfice — Enter this command to specify the flow meter type. Default has already been set as orifice. Future releases will allow other types of flow meters.

TYPe of orifice = — Enter your choice of orifice type.
Options are:

SQUared-edged (default)
QUAdrant
CONical

Type of TAP = — Enter your choice of tap type.
Options are:

FLAnge (default)
CORner
RADius
PIPe

DIAmeter of flow meter (L units) =

Enter this command to specify the diameter of the flow meter. Not required if the CALculate SIZe keyword is specified.

or

RATio of the flow meter and pipe diameter =

An alternative to specifying the diameter of the flow meter is to specify the ratio of flow meter diameter to the inside diameter of the pipe.

Specify the Pipe Configuration

The pipe configuration can be defined by either specifying the nominal diameter and pipe wall thickness code or by specifying the inside diameter alone.

PIPe WALl thickness code = Enter the desired pipe wall thickness code. Options are:

STD (standard wall) (default)
XS (extra strong wall)
XXS (double extra strong wall)

NOMinal DIAmeter (L units) = Enter the nominal diameter for the pipe. The nominal diameters and pipe wall thickness codes are given in the DESIGN II User's Guide (page 11.1.10) and are consistent with Crane Technical Paper No. 410.

or

INSide DIAmeter (L units) = Enter the inside diameter of the pipe.

Specify the Discharge Coefficient and the Expansion Factor Method

METhod of computation = Enter the choice of computation method. Option are:

ISO available for flange, corner, radius and pipe taps. (default)
AGA available for flange and pipe taps only if a square edge orifice is specified.

Specify Desired Computation

CALculate FLOw rate Enter this command to compute the flow rate. The DIAmeter of the flow meter (or RATe) and the DELta pressure must be specified.

CALculate SIZe Enter this command to compute the diameter of the flow meter. The FLOw RATe and the DELta pressure must be specified.

CALculate delta PREssure Enter this command to compute the delta pressure of the flow meter. The DIAmeter of the flow meter (or RATe) and the FLOw RATe must be specified.

Specify Process Information

FLOw RATe (Q/Tim units) = Enter this command to specify the flow rate. This is a specification and is not necessarily the same as the feed stream flowrate. Not required if CALculate FLOwrate is specified.

DELta pressure (P units or INH2O) =

Enter this command to specify the differential pressure. Not required i f CALculate delta PREssure is specified.

Specify Output Information

PLOt RATio = r1,..., rn Enter this command to generate a plot and table for flow rate versus delta pressure for the specified flow meter to pipe diameter ratios (r1,..rn). RANge of DELta pressure needs to be specified with this command.

PLOt TEMperature (T units) = t1, ..., tn

Enter this command to generate a plot and table for flow rate versus delta pressure for the specified upstream temperature (t1,..tn). RANge of DELta pressure needs to be specified with this command.

PLOt PREssure (P units) = p1, ..., pn

Enter this command to generate a plot and table for flow rate versus delta pressure for the specified upstream pressure (p1,..pn). RANge of DELta pressure needs to be specified with this command.

RANge of DELta pressure (P units or INH2O) = DPmin, DPmax

Enter this command to specify the desired range of differential pressure.

TABle OFF Enter this command to turn off the tabular output. (output plot only)

PLOt OFF Enter this command to turn off the parametric plot. (table only)

PRInt RECycle Enter this command to provide flow meter output for each iteration of a recycle loop. Default is to not print output during recycle iterations.

Range of Application

The following table lists the range of application for the available orifice plate and tap types and the available methods for calculating the discharge coefficient and expansion factor.

Table 1

Method	Tap Type	Pipe Diameter	Beta - ratio or Dia. of Orifice	Reynold's No. Rd or RD *
ISO square-edged orifice	flange, corner, radius	2 in. < D < 36 in.	$0.2 < \beta < 0.75$	2,000-10,000,000 (RD)
	pipe	2 in. < D < 36 in.	$0.2 < \beta < 0.70$	10,000-10,000,000 (RD)
AGA square-edged orifice	flange	D > 1.6 in.	$0.1 < \beta < 0.75$	---
	pipe	D > 2 in.	$0.2 < \beta < 0.67$	---
Quadrant	flange, corner, radius	D > 2 in.	0.225 0.4 0.5 0.6 0.63	5,000 - 60,000 5,000 - 150,000 4,000 - 200,000 3,000 - 120,000 3,000 - 105,000 (Rd)
Conical	---	---	D > 0.25 in. $\beta < 0.316$	250 - 200000 (Rd)

* RD is the Reynold's No. based on the pipe diameter D.
Rd is the Reynold's No. based on the orifice diameter d.

Example - Single Phase Flow

Sizing a 303 stainless steel, corner tap orifice in a 3.97 in carbon steel pipe to measure 24000 gal/hr of water at 100 F and 1000 psig. The pressure drop reading is 200 inH2O. Also, generating a table and a parametric plot with diameter ratio at 0.4, 0.45, 0.5 and range of differential pressure is 150 and 200 inH2O.

DESIGN II Example Input

```
AB123.
* FLOW METER UNIT OPERATION EXAMPLE
   FMTR 1 = FM101,1,-2
C-  SPECIFY ORIFICE TYPE FLOW METER
   ORI
C-  SPECIFY SQUARE EDGE TYPE ORIFICE
   TYPE = SQU
C-  SPECIFY CORNER TAP TYPES
   TAP = COR
C-  SPECIFY PIPE DIAMETER
   INS DIA (IN) = 3.97
   PIP WAL = STD
C-  SPECIFY DESIRED CALCULATION - SIZE ORIFICE
   CAL SIZ
C-  SPECIFY FLOW RATE
   FLO RAT (GAL/HR) = 22000
C-  SPECIFY THE DESIRED PRESSURE DROP ACROSS THE ORIFICE
   DEL (INH2O) = 200
C-  SPECIFY PLOTS FOR FLOW RATE VS. DELTA PRESSURE FOR ORIFICE TO PIPE DIAMETER
C-  OF .4, .45, AND .5
   PLO RAT = .4,.45,.5
C-  SPECIFY THE RANGE FOR THE OUTPUT
   RANGE DEL (INH2O) = 150,200
   GENERAL
      COMPONENTS = 62
      FLOW (GAL/HR) 1 = 24000
      TP (F,PSIG) 1 = 100,1000
      STEAM TABLES
   END
```

Simulation Results

```
          + EQUIPMENT SUMMARY - INDIVIDUAL DETAILS +
****FLOWMETER            ****
            FLOW METER    1
          -------------------
EQUIPMENT NAME                =  FM10
TYPE OF FLOW METER            =   ORI
TYPE OF ORIFICE               =   SQU
TYPE OF TAP                   =   COR
DIAMETER OF FLOW METER        =    0.2178     FT
DIAMETER OF PIPE              =    0.3308     FT
```

Simulation Results (continued)

	SPECIFIED*	ACTUAL**	UNIT
FLOW RATE	0.1834E+06	0.2001E+06	LB/HR
	0.1018E+05	0.1111E+05	LBMOL/HR
	0.2200E+05	0.2400E+05	GAL/HR
PRES DROP	200.0	130.7	IN H2O

*** TABLE 1 ***

DIAMETER RATIO	PRES DROP IN H2O	FLOW RATE LB/HR
0.4000	150.0	0.5329E+05
0.4000	155.0	0.5417E+05
0.4000	160.0	0.5503E+05
0.4000	165.0	0.5589E+05
0.4000	170.0	0.5673E+05
0.4000	175.0	0.5755E+05
0.4000	180.0	0.5837E+05
0.4000	185.0	0.5917E+05
0.4000	190.0	0.5996E+05
0.4000	195.0	0.6075E+05
0.4000	200.0	0.6152E+05
0.4500	150.0	0.6813E+05
0.4500	155.0	0.6925E+05
0.4500	160.0	0.7036E+05
0.4500	165.0	0.7145E+05
0.4500	170.0	0.7252E+05
0.4500	175.0	0.7357E+05
0.4500	180.0	0.7462E+05
0.4500	185.0	0.7564E+05
0.4500	190.0	0.7666E+05
0.4500	195.0	0.7766E+05
0.4500	200.0	0.7864E+05
0.5000	150.0	0.8523E+05
0.5000	155.0	0.8664E+05
0.5000	160.0	0.8802E+05
0.5000	165.0	0.8938E+05
0.5000	170.0	0.9073E+05
0.5000	175.0	0.9205E+05
0.5000	180.0	0.9335E+05
0.5000	185.0	0.9464E+05
0.5000	190.0	0.9590E+05
0.5000	195.0	0.9716E+05
0.5000	200.0	0.9839E+05

* The SPECIFIED data are the parameters defined in the FMTR input. Pressure drop is across the orifice and does not include pressure recovery.

** The actual data is the inlet stream flow rate and the pressure drop including pressure recovery.

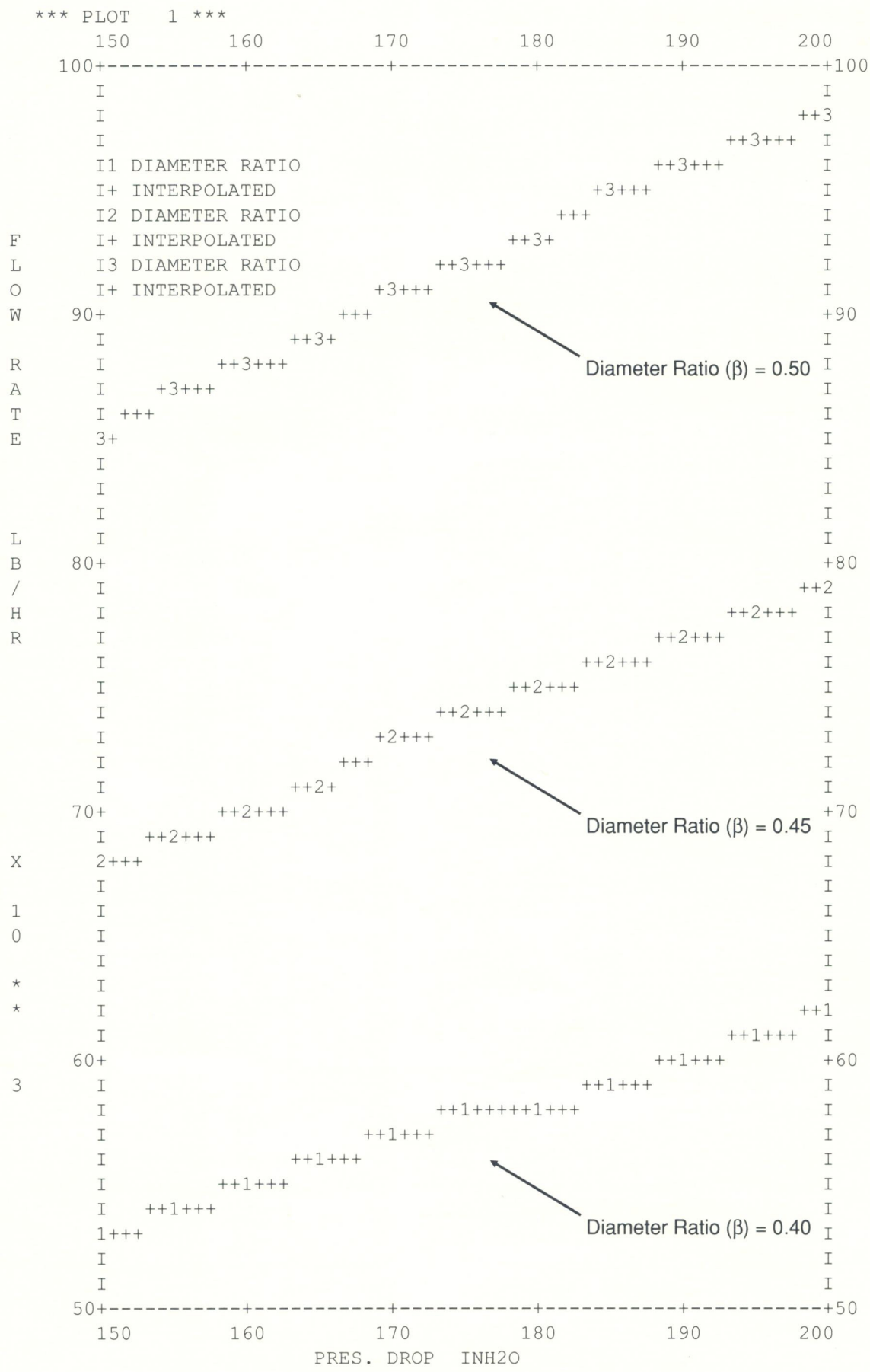
*** PLOT 1 ***
150 160 170 180 190 200
100 90 80 70 60 50
I1 DIAMETER RATIO
I+ INTERPOLATED
I2 DIAMETER RATIO
I+ INTERPOLATED
I3 DIAMETER RATIO
I+ INTERPOLATED
FLOW RATE
LB/HR
X 10**3
Diameter Ratio (β) = 0.50
Diameter Ratio (β) = 0.45
Diameter Ratio (β) = 0.40
PRES. DROP INH2O

The methods for the various orifice and tap types were obtained from the references and are shown in the following table, Figure 1, and Figure 2.

Table 2

Orifice Type	Tap type			
	Flange	Corner	Radius	Pipe
Square-edged	1, 2	1	1	1, 2
Quadrant	3	3	3	---
Conical	4	4	4	---

Figure 1 - Orifice Types

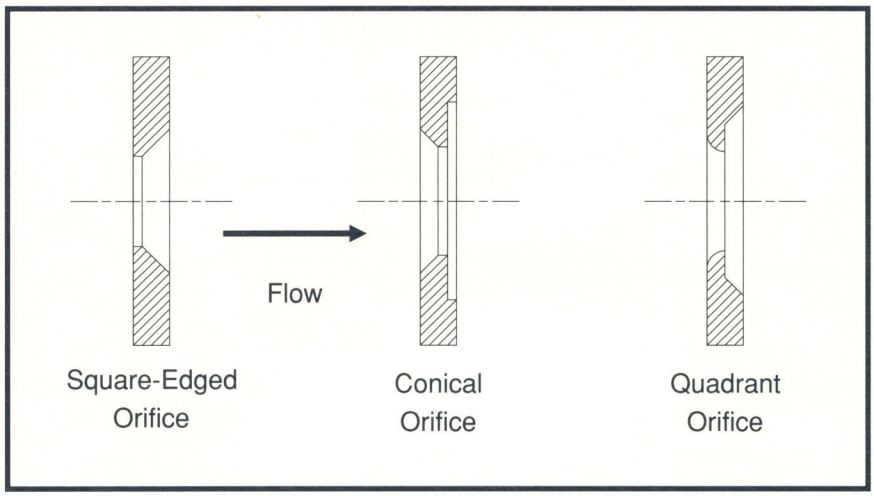

Figure 2 - Tap Types

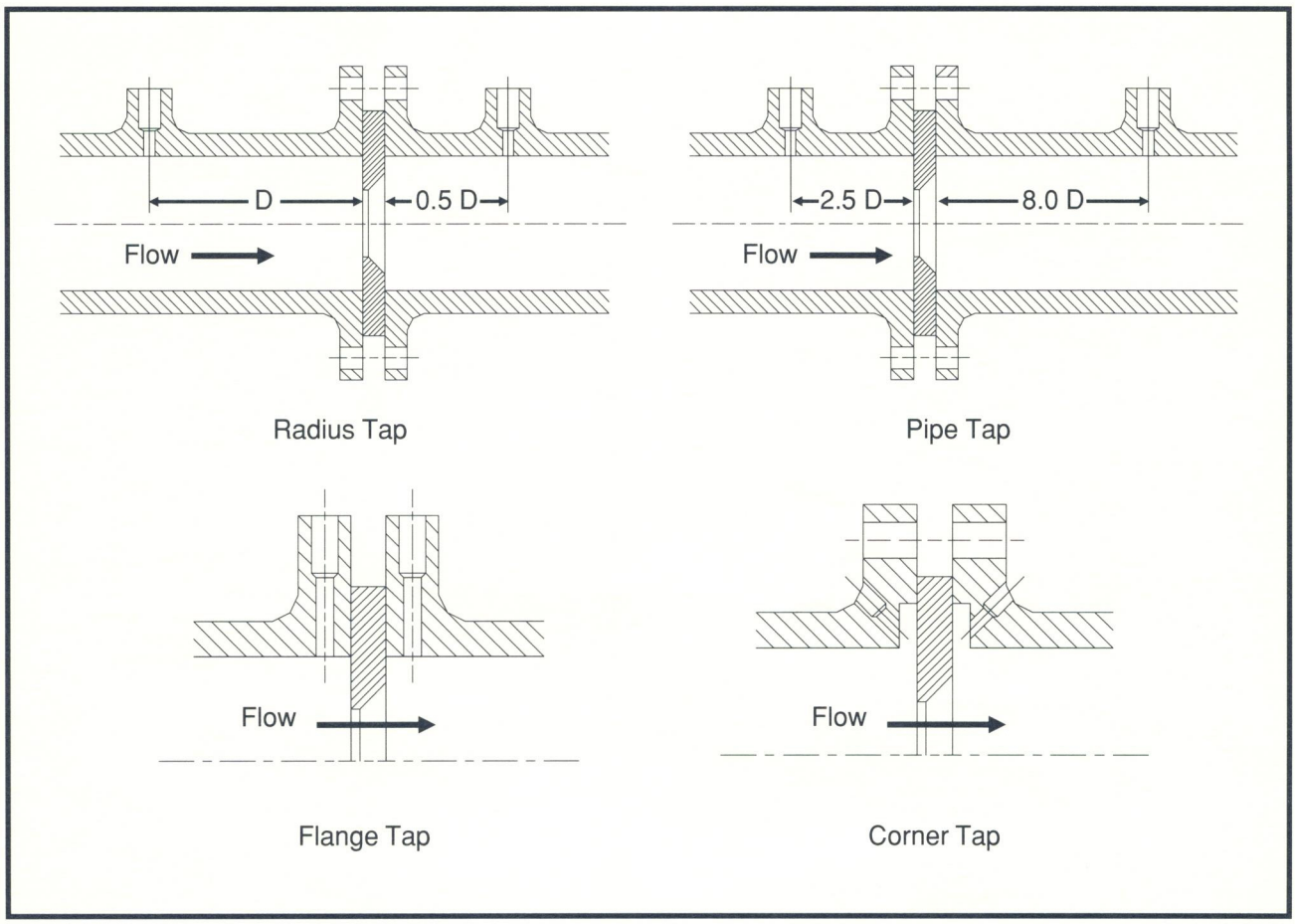

REFERENCES

1. Miller, R. W., *Flow Measurement Engineering Handbook*, McGraw-Hill Book Company, 1983.

2. API, *Manual of Petroleum Measurement Standards*, Chap. 14 - Natural Gas Fluids Measurement, Section 3 - Orifice Metering of Natural Gas and Other Related Hydrocarbon Fluids, American Petroleum Institute, Washington, D.C., 1985.

3. Perry, R. H. and Green, D., *Perry's Chemical Engineering Handbook*, McGraw Hill Book Company, 1984.

4. British Standard 1042, *Methods for the Measurement of Fluid Flow in Pipes, Part 1. Orifice Plates, Nozzles and Venturi Tubes*, UDC 532.54.08, British Standards Institution, London, 1964.

5. Murdock, J. W., "Two-Phase Flow Measurement with Orifices," *Journal of Basic Engineering*, Dec. 1962, p.419, 1962.

ELECTROLYTE THERMODYNAMICS

Overview

DESIGN II Version 5.0 and ChemTran Version 15.0 provide new electrolyte thermodynamics which will extend the range of chemical systems for which ChemShare simulation software can be applied. Electrolytes solutions differ from other solutions because of the presence of ions created by dissociation reactions. Ammonia in water is an example of an electrolyte solution.

Application

ChemShare has implemented the Edwards et al. (1) method for weak aqueous electrolytes. The user may select a sour water application in which all of the thermophysical properties are supplied by ChemShare or a generalized method may be selected in which the user may be required to provide a variety of thermophysical properties for the ions and ionic reactions.

In either case, applications of electrolytes should be restricted to the following conditions:

- The solvent must be water only
- Total solute concentrations should be $\leq$ 10 molal (gmol solute/kg solvent)
- Ionic strength should be $\leq$ 6 molal.

Electrolyte System Data

Information which is necessary for using the electrolyte model falls into four primary groups: ion information, reaction information, Henry's constant information and model binary interaction parameters.

i) Ionic species

Ionic formula and charge are required. Refer to Table 3 for ions present in the ion component library. For ionic species not present in the component library, data must be entered using the ChemTran program.

ii) Reaction information

Reaction stoichiometry and equilibrium constants are required for each reaction occurring. Currently, the only acceptable concentration unit for the reaction equilibrium constant is molality. Refer to Table 4 for reactions available in the ionic reaction library.

iii) Henry's constants

Henry's constants are required for all solutes in water. The components for which Henry's constants are available in DESIGN II and ChemTran are listed in Table 5. Henry's constants for other components must be entered with ChemTran.

iv) Model interaction parameters

Binary interaction parameters for ion-ion, molecule-ion, and molecule-molecule pairs should be specified. Without these parameters, the model reverts to an extended Debye-Hückel model and can be used for systems of ionic strengths of $\approx$ 0.1 molal or less.

DESIGN II and ChemTran Keyword Commands

DESIGN II General Section Keyword Commands

EDWARDK This keyword selects the generalized method for weak aqueous electrolytes. User must specify ionic species and reactions using IONic COMponents = and LIBrary REAction = commands. If user defined ions and reactions are present, a chemical file is required.

EDWARDH Enthalpy option from the Edwards et al., model. Commonly used with EDWARDK.

EPSOURK This keyword specifies the Edwards et al., sour water application. This method is applicable only to systems containing ions, reactions, and components listed in Tables 3, 4, and 5. A chemical file is not required. IONic COMponents = and LIBrary REAction = commands are not required.

EPSOURH May be used in DESIGN II to model systems containing ions, reactions, and components listed in Tables 2, 3, and 5. EPSOURH will commonly be used with EPSOURK and APISOUR K value options.

ION COMponents = 9401,...,9999

Enter ionic component ID numbers. Component numbers 9401-9899 are reserved for library components. Component numbers 9900-9999 are reserved for user defined ionic components. User defined ionic components must be described through the ChemTran program. This command is required with EDWARDK, not required with EPSOURK.

LIBrary REAction = 101,102,...,1,2,...

Enter reaction ID numbers. 100+ are reserved for library reactions. These reactions will have database information for stoichiometry and reaction equilibrium. 1-99 are reserved for user defined reactions. These reactions must have stoichiometric coefficients and reaction equilibrium constants entered through ChemTran. This command is required with EDWARDK, not required with EPSOURK.

PRInt ION = ...

Optional general section print command

GENeral
PRInt ION = stream no., stream no., ...
or
PRInt ION = ALL

Causes ionic compositions to be printed for the requested streams. This output follows the stream summary report and is in the same format as that summary. The default does not print the ion composition.

ChemTran Keyword Commands

If the electrolyte system to be modeled contains ionic species and ionic reactions not listed in Tables 3 and 4 or contains solutes not listed in Table 5, then ChemTran will be required to enter the appropriate data. Keywords are described as follows:

EDWARDK This keyword selects the Edwards method for weak aqueous electrolytes.

ION COMponents = 9401,...,9999

Enter ionic component ID numbers. Component numbers 9401-9899 are reserved for library components. Component numbers 9900-9999 are reserved for user defined ionic components.

ION NAMe i =

Enter the desired name for the ion.

ION NAM 9901 = H2PO4-

IONic FORmula i = # of atom1 * atom1, # of atom2 * atom2, ...

where i = ion ID number. Number must be in the 9900's.

This command is required to define all ionic species that are not in the ChemShare ion component library. See Table 3.

For example, the ion ($H_2PO_4^-$) would be entered as:

ION FOR 9901 = 2*H, 1*P, 4*O

This command must be used in conjunction with IONic CHArge command.

IONic CHArge i = value

Enter ionic charge. $H_2PO_4^-$ has an ionic charge of -1 which is entered as follows:

ION CHA 9901 = -1

LIBrary REAction = 101,102,...,1,2,...

Enter reaction ID numbers. 100+ are reserved for library reactions. These reactions will have database information for stoichiometry and reaction equilibrium. 1-99 are reserved for user defined reactions. These reactions must have stoichiometric coefficients and reaction equilibrium constants entered through ChemTran.

REAction STOichiometry i = (a1*r1 + a2*r2 + ... = b1*p1 + b2*p2 + ...)

Enter reaction stoichiometry for user defined reactions. The user defined reaction is invoked in DESIGN II / ChemTran with the LIB REA = command.

a1, a2	=	stoichiometric coefficients of reactants
r1, r2	=	component ID numbers of reactants
b1, b2	=	stoichiometric coefficients of products
p1, p2	=	component ID numbers of products
i	=	reaction ID number

Note: a1, a2, ..., b1, b2, ... are all entered as positive values.

EQUilibrium CONstant (units) i = TLL, TUL, A, B, C, D

Enter coefficients for the equilibrium constant correlation for reaction i. TLL and TUL are the lower and upper temperature limits of the range of validity of the correlation parameters. A, B, C and D are the parameters in the correlation

$$\ln(K) = A + B / T + C * T + D * \ln(T)$$

The units entered are for the temperature within the reaction equilibrium constant correlation must be either Rankine or Kelvin.

The reaction equilibrium constant will also have composition units associated with it. These units MUST be molality.

EDA i,j = A_{ij}, A_{ji}, B_{ij}, B_{ji}, C_{ij}, C_{ji}

Enter the $\beta_{ij}^{(0)}$ interaction parameters for the Edwards model.

$$\beta^{(0)}{}_{ij} = A_{ij} + B_{ij} * T + C_{ij} / T$$

where i and j are ion or molecule ID numbers.

EDB i,j = D_{ij}, D_{ji}

Enter the $\beta_{ij}^{(1)}$ interaction parameters for the Edwards model.

Presently, interaction parameters $\beta_{ij}^{(0)}$ and $\beta_{ij}^{(1)}$ parameters must be obtained from literature.

HENry's constant in WATer (options, units) i = TLL, TUL, ...

Enter coefficients in Henry's constant expression. Dimensions for the Henry's constant are pressure concentration. Again, liquid concentration MUST be molality.

Two options are available for the HEN WAT command.

DATa - Henry's constant for component i in water can be entered in "temperature-Henry's constant" pairs. The data will then be used to determine the regression constants for the Henry's constant. For this option temperature units should also be entered and they may be in C, F, R, or K. Using this option, the command takes the form:

HEN WAT (DAT,units) = TLL,TUL,H1,T1,H2,T2,...

CONstants - The regression coefficients for the Henry's constant can be entered directly. The correlation form is:

$$\ln(H) = A + B / T + C * T + D * \ln(T)$$

The temperature units should be Rankine or Kelvin. If this option is used the command takes the form:

HEN WAT (CON,units) = TLL,TUL,A,B,C,D

Current Application Constraints

a) Only systems containing water and those components for which Henry's constant information is available are allowed. Mixed solvents and crudes are not supported.

b) User input reactions should be in mass and charge balance.

c) ChemTran does not provide regression capabilities to determine the coefficients necessary for equilibrium constants or interaction parameters.

d) No strong electrolytes or salts are allowed.

e) Molality units must for liquid ionic compositions.

f) Transport/Physical properties are not corrected for ionic effects.

g) For non-sour water systems, contact ChemShare for latest available references.

Theory

Electrolyte solutions differ from nonelectrolyte solutions primarily due to the presence of ions and the long range electrostatic forces between those ions. For this reason, thermodynamic correlations that do not account for these forces do not predict electrolyte system phase equilibria accurately.

Peter Debye and Erich Hückel derived a model which accounts for these electrostatic forces in 1923 (2). Their work is the basis for many models developed since then.

Their results were

$$\text{Log } \gamma^* = - A z_i^2 \sqrt{I} \qquad \text{Eq. (1)}$$

Due to assumptions and simplification in the derivation, the Debye-Hückel limiting law (Eq. 1) is valid only for very dilute solutions. (Ionic strength <0.001 molal).

Two useful pieces of information obtained from the Debye-Hückel limiting law are:

1. As the temperature of the solution increases, the electrostatic effects decrease, primarily because the increased kinetic energy implies a greater separation between charge centers.

2. As the dielectric constant of the solvent increases, the shielding of the electrostatic effects increases and, therefore, the intermolecular effect decrease.

ChemShare has now implemented an equilibrium model for weak, aqueous electrolytes based on modifications by Edwards, Maurer, Newman, and Prausnitz to an extended Debye-Hückel model, as published in the AIChE Journal, 1978 (1). A weak electrolyte is distinguished from a strong electrolyte in that it does not dissociate completely. Liquid phase activity coefficients are determined according to the expression shown below.

The following equations were derived by Edwards, et al., and are the basis for the ChemShare implementation of electrolyte thermodynamics:

$$\ln \gamma_i^* = -A_\phi z_i^2 \left(\frac{\sqrt{I}}{1 + 1.2\sqrt{I}} + \frac{2}{1.2} \ln(1 + 1.2\sqrt{I}) \right) \qquad \text{Eq. (2)}$$

$$+ 2 \sum_{j \neq H_2O} m_j \left(\beta_{ij}^{(0)} + \frac{\beta_{ij}^{(1)}}{2I} \left[1 - (1 + 2\sqrt{I}) \exp(-2\sqrt{I}) \right] \right)$$

$$- \frac{z_i^2}{4I^2} \sum_{j \neq H_2O} \sum_{k \neq H_2O} m_j m_k \beta_{jk}^{(1)} \left(1 - (1 + 2\sqrt{I} + 2I) \exp(-2\sqrt{I}) \right)$$

and for water

$$\ln a_w = M_{H2O} \left(\frac{2 A_\phi I^{3/2}}{1 + 1.2\sqrt{I}} - \sum_{i \neq H_2O} \sum_{j \neq H_2O} m_i m_j \left[\beta_{ij}^{(0)} + \beta_{ij}^{(1)} \exp(-2\sqrt{I}) \right] \right)$$

$$- M_{H2O} \sum_{i \neq H_2O} m_i \qquad \text{Eq. (3)}$$

where

a_w	activity of water	
A_ϕ	Debye-Hückel constant	
I	ionic strength $= (\Sigma m_i z_i^2)/2$	
m_i	species molalities	
M_{H2O}	molecular weight of water	
β	interaction parameters	
z_i	species charges	($z_i = 0$ for molecules)
γ^*	unsymmetric activity coefficients.	

The first term in equation (2) represents the effects of long range forces on the activity coefficients of the species. Notice that for neutral molecules, $z_i = 0$ and electrostatic forces offer no contribution. The second and third terms of equation (2) are meant to account for short range effects which can be thought of as being equivalent to the Renon or Uniquac equations for non-electrolytes. The β_{ij} are interaction parameters which are determined from data regressions. The activity of the water, equation (3), is determined from the Gibbs-Duhem equation.

This model accounts for ionic reactions in liquid phase, and, therefore requires all ionic species and reactions be defined along with the associated ionic reaction equilibrium constants. In addition, Henry's law constants are required to calculate solute liquid phase concentrations. This model is combined with the Redlich-Kwong equation to determine vapor phase fugacity coefficients.

Table 3 - Ion Component Library

Ionic Component ID	Ion
9401	H^+
9402	OH^-
9631	$S^=$
9632	HS^-
9633	$SO3^=$
9634	$HSO3^-$
9651	$CO3^=$
9652	$HCO3^-$
9661	CN^-
9701	$NH4^+$
9711	$NH2COO^-$

Table 4 - Ionic Reaction Library

Ionic Reaction ID	Ionic Reaction		
101	H2O	⟷	$H^+ + OH^-$
102	CO2 + H2O	⟷	$H^+ + HCO3^-$
103	$HCO3^-$	⟷	$H^+ + CO3^=$
104	H2S	⟷	$H^+ + HS^-$
105	HS^-	⟷	$H^+ + S^=$
106	SO2 + H2O	⟷	$H^+ + HSO3^-$
107	$HSO3^-$	⟷	$H^+ + SO3^=$
108	HCN	⟷	$H^+ + CN^-$
109	NH3 + H2O	⟷	$NH4^+ + OH^-$
110	NH3 + $HCO3^-$	⟷	$NH2COO^- + H2O$

Note: These reactions may be combined to specify other reactions.
e.g. NH3 + CO2 + H2O = $NH4^+ + HCO3^-$
This is a combination of reactions 102 + 109 - 101

All specified reactions must be independent reactions. While this is not the only list of reactions which can be used to describe the sour water system, it is an independent set. Any reaction in the system should be a linear combination of these reactions.

Table 5 - Henry's Constants in Water

Henry's constants for the following components are built into DESIGN II and ChemTran data bases. The source of the Henry's constants used is Wilhelm, Battino and Wilcock, *Chemical Reviews*, volume 77, number 2, 1977, unless otherwise noted.

1 - HYDROGEN
2 - METHANE
3 - ETHANE
4 - PROPANE
5 - I-BUTANE
6 - N-BUTANE
22 - ETHYLENE
23 - PROPYLENE
24 - 1-BUTENE (*)
27 - I-BUTENE
28 - 1,3-BUTADIENE
46 - NITROGEN
47 - OXYGEN
48 - CARBON MONOXIDE
49 - CARBON DIOXIDE (**)
50 - HYDROGEN SULFIDE (**)
51 - SULFUR DIOXIDE (**)
63 - AMMONIA (**)
65 - ACETYLENE
66 - PROPYNE
67 - 1-BUTYNE
68 - 2-METHYLPROPENE
1014 - ETHYLAMINE
1018 - HYDROGEN CYANIDE (**)
1037 - METHYL CHLORIDE
1039 - FLUOROMETHANE
1041 - NITRIC OXIDE
1043 - NITROUS OXIDE
1052 - CARBON TETRAFLUORIDE
1062 - CHLORINE
1077 - METHYL AMINE
1081 - DIMETHYL AMINE
1087 - CARBONYL SULFIDE
1125 - BROMOMETHANE
1137 - VINYL CHLORIDE
1154 - FLUOROTRICHLOROMETHANE (FREON 11)
1156 - CYCLOPROPANE
1171 - ARGON
1172 - HELIUM
1173 - NEON
7048 - VINYLACETYLENE

(*) cis- and trans-2-butene which are available in the MDEAK option for DESIGN II are not in the dataset.

(**) Values for these components have been taken from the Edwards, Mauer, Newman Prausnitz paper referred to earlier rather than the paper by Wilhelm, Battino and Wilcock.

DESIGN II Sour Water Example Input

The following example demonstrates the flash of a sour water stream. EDWARDK is used to handle weak, aqueous electrolytes. Although the reactions needed to describe this system are available in the reaction library, user-defined reactions are used here for demonstration purposes. The applicable ChemTran example file follows the DESIGN II example file.

```
   AB123.
   * SAMPLE PROBLEM DEMONSTRATING USE OF EDWARDK.

   FLASH 1 = FLASH, 1, -2, -3

   GENERAL

C-  LIST LIBRARY AND IONIC COMPONENTS.

C-  WATER AMMONIA, HYDROGEN SULFIDE
   COMPONENTS = 62,63,50
C-                    H+,  OH-,  NH4+,  HS-
   ION COMPONENTS = 9401, 9402, 9701, 9632,

C-  ENTER USER DEFINED LIBRARY REACTIONS

C-  REACTION 1   H2O  <=>  H+  + OH-
C-  REACTION 9   NH3 + H2O  <=>  NH4+  +  OH-
   LIBRARY REACTIONS = 1, 9

C-  DEFINE STREAM 1
   TP (F, BAR) 1 = 77, 1
   FLOW 1 = 100, 10, 5

C-  CHOOSE THERMODYNAMICS.
   EDWARDK, EDWARDH

C-  REQUEST ION COMPOSITIONS TO BE PRINTED FOR ALL STREAMS.
   PRINT ION = ALL

C-  IDENTIFY THE CHEMTRAN FILE ASSOCIATED WITH THIS DESIGNII FILE.
   CHEMICAL FILE = AAAA,BBBB,CCCC

   END
```

ChemTran Example Input

```
   AB123.
   *  DEFINE USER SPECIFIED REACTIONS
C-  IDENTIFY LIBRARY AND ION COMPONENTS.
C-  WATER, AMMONIA, HYDROGEN SULFIDE.
   COMPONENT = 62, 63, 50
C-                  H+,  OH-, HS-, NH4+
   ION COMPONENT = 9401,9402,9632,9701
C-  CHOOSE THERMODYNAMIC METHOD.
   EDWARDK

C-  ENTER USER DEFINED LIBRARY REACTIONS.
   LIBRARY REACTION = 1, 9

C-  DEFINE REACTION STOICIOMETRY
C-  REACTION 1                H2O  <=>  H+  + OH-
C-  REACTION 9          NH3 + H2O  <=>  NH4+ + OH-
   REACTION STOICHIOMETRY 1 = (1*62 = 1*9401 + 1*9402)
   REACTION STOICHIOMETRY 2 = (1*63 + 1*62 = 1*9701 + 1*9402)

C-  ENTER EQUILIBRIUM CONSTANTS A,B,C,D.
   EQUILIBRIUM CONSTANTS (R) 1 = 500, 800, 154.144, -24202.62, 0.0, -22.4773
   EQUILIBRIUM CONSTANTS (R) 9 = 500, 800, 106.8259, -10645.3476, -0.006115561, -9

C-  ENTER EDWARDS INTERACTION PARAMETERS FOR MOLECULE-MOLECULE PAIRS.
   EDA 63, 63 = -0.0260, -0.0260, 0.0, 0.0, 22.122, 22.122
   EDA 63, 50 = -0.1186, -0.1186, 0.0, 0.0, 66.465, 66.465
   EDA 50, 50 = -0.2106, -0.2106, 0.0, 0.0, 110.808, 110.808

C-  ENTER EDWARDS INTERACTION PARAMETERS FOR ION-ION PAIRS.
C-  NOT NECESSARY FOR IONS OF SAME CHARGE.
   EDA 9401, 9402 = 0.208, 0.208
   EDA 9401, 9632 = 0.194, 0.194

   EDA 9701, 9402 =  0.060,  0.060
   EDA 9701, 9632 =  0.046,  0.046

   EDB 9401, 9402 = 0.65448, 0.65448
   EDB 9401, 9632 = 0.61164, 0.61164

   EDB 9701, 9402 =  0.20160,  0.20160
   EDB 9701, 9632 =  0.15876,  0.15876

C-  ENTER EDWARDS  INTERACTION PARAMETERS FOR ION-MOLECULE PAIRS.
   EDA 63, 9632 = -0.06423, -0.06423, 0.0001010, 0.0001010, 0.0, 0.0
   EDA 63, 9401 =  0.015,  0.015, 0.0, 0.0, 0.0, 0.0
   EDA 63, 9402 = -0.03801, -0.03801, 0.0001169, 0.0001169, 0.0, 0.0
   EDA 50, 9701 = 0.07932, 0.07932, 0.0000066, 0.0000066, 0.0, 0.0
   EDA 50, 9401 =  0.017,  0.017, 0.0, 0.0, 0.0, 0.0
   EDA 50, 9402 = -0.05290, -0.05290, 0.0001467, 0.0001467, 0.0, 0.0
C-  IDENTIFY CHEMICAL FILE NAME.
   FILE NEW = AAAA,BBBB,CCCC
   END
```

Simulation Results

STREAM SUMMARY

STREAM NUMBER		1	2	3
EQUIP CONXION		FEED-FLAS	FLAS-PROD	FLAS-PROD
		(0)-(1)	(1)-(0)	(1)-(0)
VAPOR FRACTION		0.88080E-01	1.0000	0.00000
TEMPERATURE F		77.000	77.000	77.000
PRESSURE PSIA		14.504	14.504	14.504
ENTHALPY BTU/HR		-0.18344E+07	3508.3	-0.18379E+07
LB/FT3	T-P	0.64410E-01	0.64410E-01	61.577
S.G.(60F)	STP	0.97207		0.97207
GAL/MIN	STP	3.8766		3.8766
MMSCF/DAY	STP	0.92239E-01	0.92239E-01	
MOLECULAR WT		18.628	25.394	17.975
FLOW RATES	LBMOL/HR			
WATER		100.00	0.27964	99.720
AMMONIA		10.000	4.8972	5.1028
H2S		5.0000	4.9524	0.47608E-01
		---	---	---
TOTAL	LBMOL/HR	115.00	10.129	104.87
TOTAL	LB/HR	2142.2	257.22	1885.0

SOLUTION REACHED

IONIC STREAM SUMMARY

STREAM NUMBER		1	3
EQUIP CONXION		FEED-FLAS	FLAS-PROD
		(0)-(1)	(1)-(0)
VAPOR FRACTION		0.88080E-01	0.00000
TEMPERATURE F		77.000	77.000
PRESSURE PSIA		14.504	14.504
ENTHALPY BTU/HR		-0.18344E+07	-0.18379E+07
LB/FT3	T-P	0.64410E-01	61.577
S.G.(60F)	STP	0.97207	0.97207
GAL/MIN	STP	3.8766	3.8766
MMSCF/DAY	STP	0.92239E-01	
MOLECULAR WT		18.628	17.975
LB/HR	TOTAL	2142.2	1885.0
LIQUID COMPOSITION - MOLAL			
H+		0.27445E-14	0.27445E-14
OH-		2.8404	2.8404
NH4+		2.8404	2.8404
HS-		0.00000	0.00000
WATER		52.668	52.668
AMMONIA		0.63182E-33	0.63182E-33
H2S		0.26501E-01	0.26501E-01

References

1. Edwards, T. J., Maurer, G., Newman, J., and Prausnitz, J. M. , *AIChE Journal*, Volume 24, number 6, 1979, p. 966

2. Zemaitis, J. F., Clark, D. M., Rafal, M., Scrivner, N. C., *Handbook of Aqueous Electrolyte Thermodynamics*, AIChE 1986

3. Kawazuishi, K., Prausnitz, J. M., *Industrial and Engineering Chemistry Research*, 1987, volume 26, number 7, p. 1482-1488

4. Pitzer, K. S., "Thermodynamics of Electrolytes Theoretical Basis and General Equations", *The Journal of Physical Chemistry*, Vol 77, Number 2, 1973

UNIFAC LLE
ACTIVITY COEFFICIENT ESTIMATION METHOD

Overview

ChemShare was the first simulation company to offer the UNIFAC method to predict vapor-liquid equilibria (VLE). In DESIGN II Version 5.0 and ChemTran Version 15.0, ChemShare now provides UNIFAC methods to predict liquid-liquid equilibria (LLE). While the UNIFAC model used to predict liquid-liquid phase behavior is the same as that used to predict vapor liquid equilibrium, the interaction parameters are different. The new UNIFAC parameters used to predict LLE phase behavior are consistent with those published by Magnussen, et al. (1).

Application

UNIFAC LLE group interactions are available for 32 different groups representing hydrocarbons, water, alcohols, organic acids, and other compounds. See Figure 3 to determine if UNIFAC contains LLE group parameters are available for your chemical system. This method is restricted to use between 10 and 40 degrees C.

Note: This method should be used with caution because it is only an estimation technique. If accuracy is of primary importance, LLE data should be regressed with ChemTran if such data is available.

DESIGN II General Section and ChemTran Keyword Commands

To specify the UNIFAC method for LLE use:

LL UNIFACK

To specify the LLE UNIFAC parameter library use:

LLE UNIFAC = 1 (default)

For an example of using LLE UNIFAC and VLE UNIFAC in the same flow sheet, see the VLE UNIFAC section on page 52.

References

1. Magnussen, T., Rasmussen, P., and Fredenslund, A., "UNIFAC Parameter Tables for Prediction of Liquid-Liquid Equilibria, *Industrial Engineering and Chemical Process Design and Development*, Volume 20, 1981.

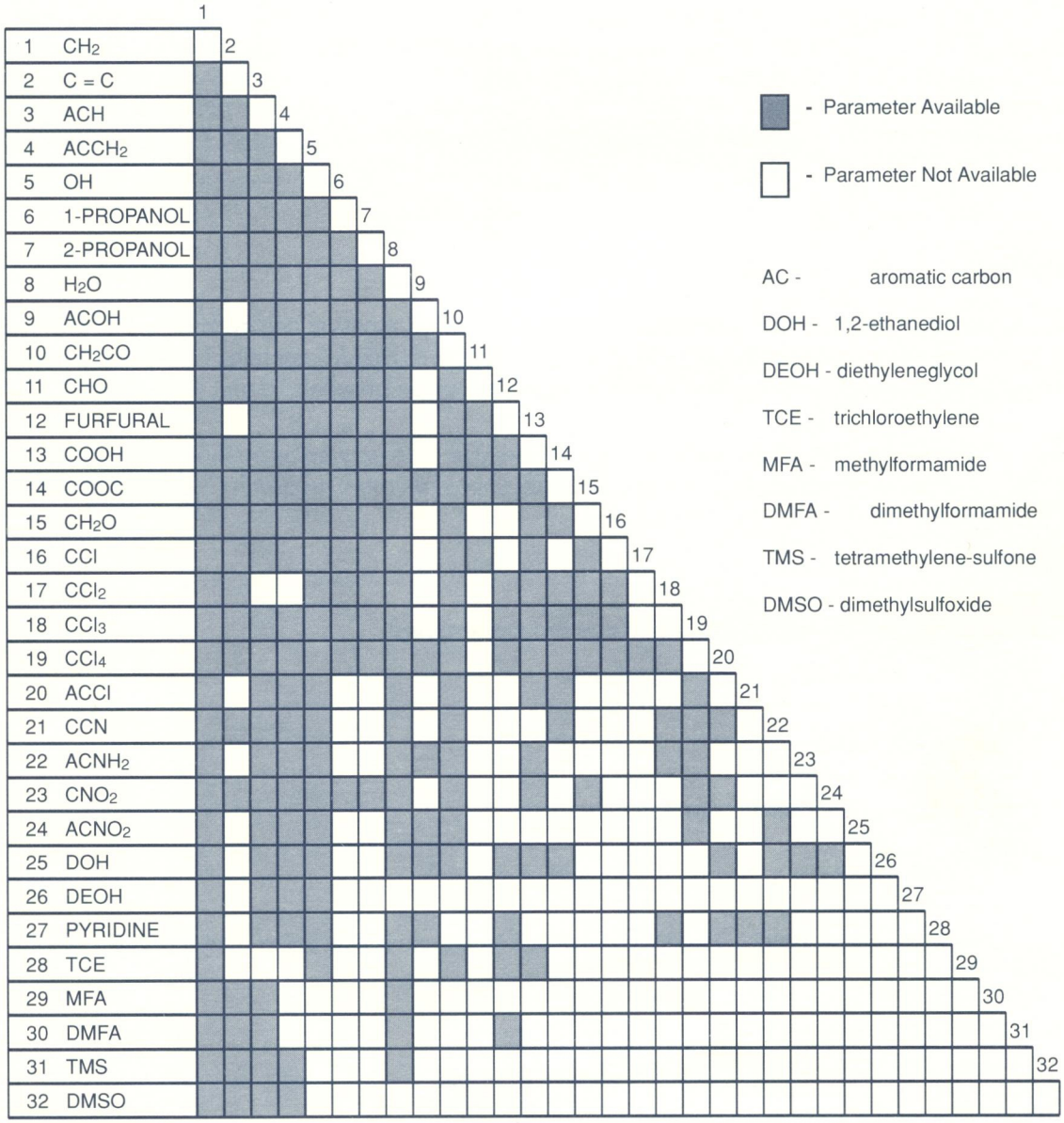

Figure 3 - UNIFAC LLE Group Table

REFINE COLUMN IMPROVEMENTS

REFIne Column REStart Capability

The REFIne unit operation is required to solve large sets of nonlinear algebraic equations and for complex towers this can be time consuming. To improve engineering productivity, a new REStart feature has been added which speeds execution of multiple cases of REFIne columns. The solution of the nonlinear algebraic equations for a REFIne column is stored in a file and subsequent runs of the REFIne column can read this file and restart their calculations from the column's previous solution. The restart option may be used for a column which has the same physical configuration and specifications as the original column although the values of the specifications may be different.

Using the REStart feature can reduce the runtime by more than 50%! The time savings can be even greater if the flowsheet includes multiple REFIne columns.

DESIGN II Keyword Commands

REFIne Section Commands

The restart feature in DESIGN II can be used for one or more REFIne columns in a flowsheet. The restart feature is therefore an equipment module option. The implementation of this option utilizes two new REFIne module commands:

WRIte to REStart FILe

and

LOAd from REStart FILe

When the WRIte REStart FILe command is present in the REFIne module, DESIGN II will write all restart information for that module to a file named in the GENeral section of the DESIGN II flowsheet input. When the LOAd REStart FILe command is present DESIGN II will read the restart information from the file designated in the GENeral section.

GENeral Section Commands

The convention for naming restart files is the same as for both stream or chemical files. Use of this feature requires two commands:

NEW REStart FILe = nam1, nam2, nam3

OLD REStart FILe = nam4, nam5, nam6

The NEW REStart FILe creates the file where the solution to the REFIne column is written. The OLD REStart FILe command opens an existing file from which restart data can be read or to which restart data can be written. The named entries to the right hand side of the equal sign are one to four character arguments and each begin with an alphabetic character.

The computer operating system commands should be used to delete any unwanted restart files.

Application of Commands

The WRIte REStart FILe and LOAd REStart FILe commands operate in conjunction with the NEW REStart FILe or the OLD REStart FILe command according to the following rules:

1. Load (read) operations initiated by the LOAd REStart FILe command will always be done on the file named in the OLD REStart FILe command.

2. If only the OLD REStart FILe command is present in the GENeral section, then the write operation is performed on the file named in this command and the old data is overwritten.

3. If both the OLD REStart FILe and the NEW REStart FILe command are present, then the write operation is performed on the file named in the NEW REStart FILe command.

Restrictions

There are certain restrictions on how the restart option may be used:

1. Restart information from a previous column calculation should be used only for a column that has the same physical configuration and specifications. The actual values of the specifications may be changed. For example, the locations of side strippers, side draws, the number of trays in either the main column or in side strippers, etc. must remain the same. The less the specification values are changed, the faster the execution time.

2. No parameter should be changed that alters the problem description. Although product rate specifications may change, all specifications types must remain the same. For example, the value of a column FIX may be changed, however, the FIX specification itself may not be added or deleted.

Examples

The Example below is adapted from Example 1 of the REFIne chapter, 5.22, in the DESIGN II User's Guide. The following commands are extracted from the first run. They specify the bottom product flowrate (PRO command) and the side stripper product flowrate (PRO STR command). The column solution is written to a new file named REFI, DATA, FILE.

```
.
.
REFI 33=FRAC, 1, -2, -3, -4, -5, -6
   .
   .
   PRO (BBL/DAY)=0, 26875
   PRO STR (BBL/DAY)=9100, 7875, 9200
C- WRITE SOLUTION TO RESTART FILE
   WRITE RESTART FILE
   .
   .
GEN
   .
   .
C- CREATE RESTART FILE TO WHICH SOLUTION WILL BE WRITTEN
   NEW RESTART FILE=REFI, DATA, FILE
   .
   .
END
```

On a subsequent run the solution to the column is read from the restart file and used as the initial conditions in solving the new column. The new column below has different values for the product flowrates but the same configuration as the column in the initial run (same arrangement of pumparounds, side strippers, feed and product locations, etc.).

```
.
.
REFI 33=FRAC, 1, -2, -3, -4, -5, -6
   .
   .
   PRO (BBL/DAY)=0, 26800
   PRO STR (BBL/DAY)=9200, 7775, 9275
C- READ PREVIOUS SOLUTION FROM RESTART FILE
   LOAD RESTART FILE
   .
   .
GEN
   .
   .
C- OPEN RESTART FILE CONTAINING PREVIOUS SOLUTION
   OLD RESTART FILE=REFI, DATA, FILE
   .
   .
END
```

REFIne Dry Molar Specifications

The REFIne unit operation now offers the user the ability to specify molar product rates on a dry basis.

DESIGN II Keyword Command:

PROduct (DRY, units) =
PROduct OVErhead (DRY, units) =

where units = moles/time

Note 1: DRY must appear FIRST in the parenthesis.

Note 2: All volumetric and weight PROduct rate and PROduct OVErhead specifications are on a dry basis. Volumetric and weight product rate specifications can not be specified on a wet basis.

Note 3: The default molar PROduct specification is on a wet basis.

Heat Exchanger Improvements

To increase your productivity, ChemShare continually improves its unit operation model. We have made several improvements to the HEAt EXChanger unit operation to improve the robustness of the model and provide the user new features that enable more flexibility in specifying the heat exchanger model.

New Heat Exchanger Features

The following features are now available for the HEAt EXChanger module.

Refrigerant Exchanger, UA Specification

It is now possible to use the overall heat transfer coefficient, U, and the heat transfer AREa as specifications for a refrigerant exchanger. DESIGN II will then determine the flow rate of the refrigerant such that it will vaporize from a bubble point liquid to a dew point vapor given the specified U and AREa. (See DESIGN II User's Guide, page 5.11.17).

DESIGN II keyword commands to specify U and A are:

SIMple (default)
U (units) =
AREa (units) =

The following is an example DESIGN II input file that will determine the amount of propane that will be completely vaporized in a refrigerant heat exchanger, given a "U" of 66 BTU/HR/FT2 and an area of 10,000 FT2.

DESIGN II Example Input

```
      AB123.
      *REFRIGERANT EXCHANGER WITH U*A SPECIFICATION
      HEA EXC 6 = REFR, 9, 11, -10, -12
         SIMPLE
         DEL (PSIA) = 5
         TEMPERATURE REFRIGERANT 4 = 10
C-     SPECIFY OVERALL HEAT TRANSFER COEFFICIENT AND AREA
         U(BTU/HR/FT2)=66
         AREA(FT2)=10000

      GENERAL
         COM =3,4,5,6,7,8,10,11,62
         IMM=62
         RKK,RKH
         FLO(GMOL/SEC)9=500,200,200,4*100,0,150
         TP 9 =200,150
      END
```

Simulation Results

STREAM SUMMARY

STREAM NUMBER	9	10	11	12
EQUIP CONXION	FEED-REFR	REFR-PROD	FEED-REFR	REFR-PROD
	(0)-(6)	(6)-(0)	(0)-(6)	(6)-(0)
VAPOR FRACTION	0.99096	0.00000	0.00000	1.0000
TEMPERATURE F	200.00	40.665	10.000	10.000
PRESSURE PSIA	150.00	145.00	46.360	46.360
ENTHALPY BTU/HR	0.30485E+08	-0.10480E+09	-0.14512E+09	-0.98350E+07
LB/FT3 T-P	1.1278	33.927	32.228	0.43925
S.G.(60F) STP	1.0001	0.52047	0.50759	
GAL/MIN STP	3.7473	2043.5	3084.9	
MMSCF/DAY STP	103.85			161.76
MOLECULAR WT	46.233	46.233	44.094	44.094
FLOW RATES LBMOL/HR				
ETHANE	3968.3	3968.3	0.00000	0.00000
PROPANE	1587.3	1587.3	17764.	17764.
I-BUTANE	1587.3	1587.3	0.00000	0.00000
N-BUTANE	793.66	793.66	0.00000	0.00000
I-PENTANE	793.66	793.66	0.00000	0.00000
N-PENTANE	793.66	793.66	0.00000	0.00000
N-HEXANE	793.66	793.66	0.00000	0.00000
N-HEPTANE	0.00000	0.00000	0.00000	0.00000
WATER	1190.5	1190.5	0.00000	0.00000
	---	---	---	---
TOTAL LBMOL/HR	11508.	11508.	17764.	17764.
TOTAL LB/HR	0.53205E+06	0.53205E+06	0.78329E+06	0.78329E+06

Multiple Feed And Outlet Streams

Multiple feed streams are now allowed on the shell and tube sides of the HEAt EXChanger. Previously only one shell side and one tune side were allowed and multiple feeds had to be combined upstream using a mixer.

Phase separation can now be performed on heat exchanger product streams whereas before a FLAsh unit was required.

DESIGN II Keyword Commands

To specify the number of shell side feeds use:

NUMber of FEEds 1 =

To specify the number of tube side feeds use:

NUMber of FEEDS 2 =

To specify phase separation use:

PROduct n = aaa

where

n = 1 for the shell side product
n = 2 for tube side product
aaa = SIN for single phase
aaa = TWO for two phase
aaa = THR for three phase

Example:

The following example illustrates how to specify two shell side feeds and one tube side feed with phase separation of the shell side products.

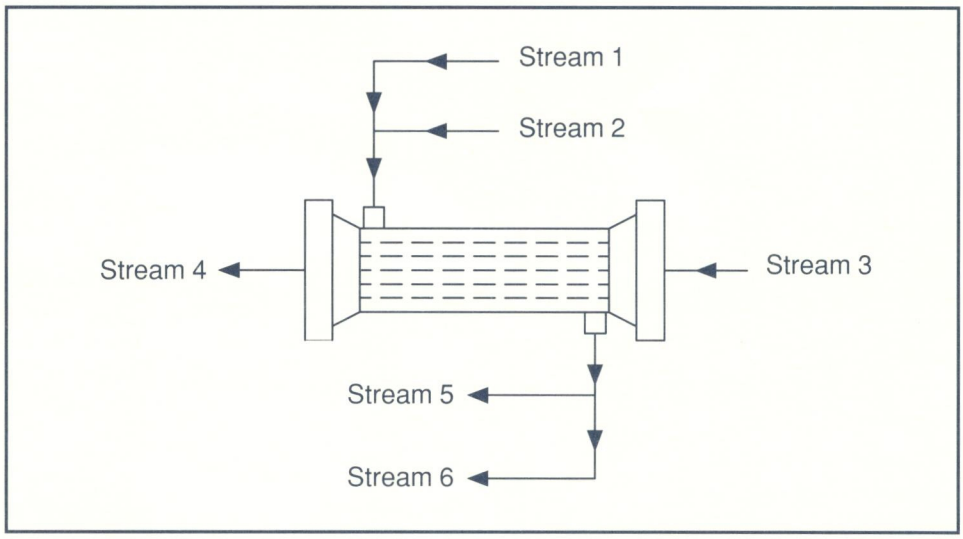

Figure 4 - Heat Exchanger With Two Feeds and Product Phase Seperation

DESIGN II Example Input

```
AB123.
*NEW HEAT EXCHANGER PHASE SEPARATION
HEAT EXCHANGER 3 =E301, 1,2,3,-4,-5,-6
   TEM OUT(F) =  115
   DEL(PSIA) =  7
   NUM FEE 1 = 2
   NUM FEE 2 = 1
   PRODUCT 1 = TWO
```

Air cooled heat exchanger

Air may now be used as a utility fluid. It is not necessary to specify air (component 99) in the component list in order to use air as a utility fluid. Heat exchanger rating is not permitted with the FIN FAN heat exchanger.

DESIGN II Keywords Commands

To specify air cooled heat exchanger use:

FIN FAN

To specify air temperatures in and out use:

TEM AIR IN = and
TEM AIR OUT =

DESIGN II Example Input

```
AB123.
*SIMPLE AIR COOLED EXCHANGER EXAMPLE
HEA EXC 5=AIRCOOLER,20,-21
   FIN FAN
   TEM AIR IN = 100,  TEM AIR OUT = 132
   U=4.2
   AREA (FT2) = 2000
GENERAL
   COM=100,99
   AMB 100=350, API 100=37, AMW 100=175, NAM 100=PETFRAC
   FLO (LB/HR) 20 = 273000
   TP 20 = 250, 50
END
```

Heat Exchanger Rating

Several improvements have been made to DESIGN II's heat exchanger rating capabilities which will provide the user with the ability to converge a wider range of applications and review the results in a more convenient format.

Improved Convergence

Improvements have been made to the convergence methods to make the rating calculation more robust. The change is most notable in narrow boiling mixtures that undergo vaporization. The new methods improve modeling of pure components which undergo a phase change.

Rating of Heat Exchangers in Series

DESIGN II can now rate two E shell heat exchangers in series. This configuration is shown below.

Note: See DESIGN II User's Guide for details on how to specify different feed configurations (page 5.11.23)

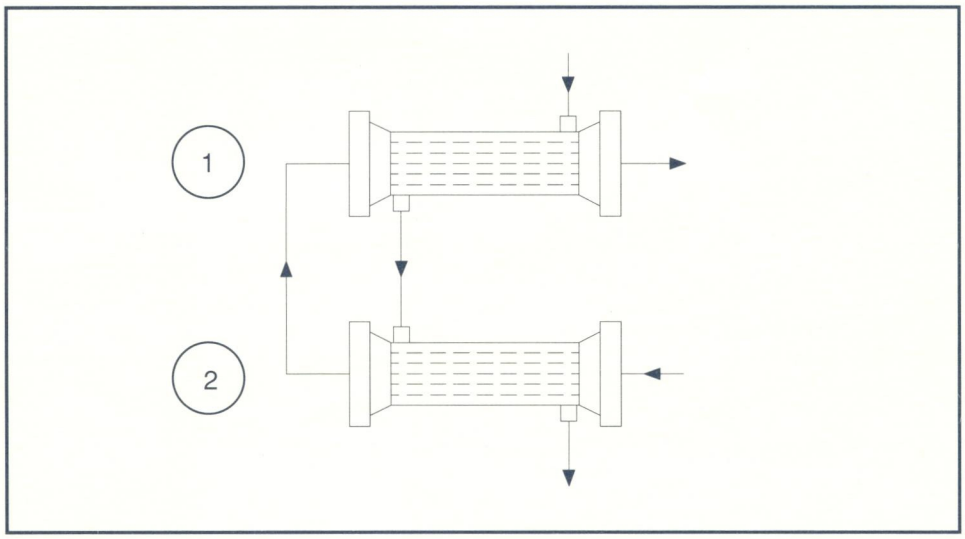

Figure 5 - Heat Exchanger Configuration

DESIGN II Keyword Commands

The command to rate two E-shell exchangers in series are:

EXChanger type = xEx (where x represents the T.E.M.A. description for heat exchanger front and rear heads)

SHEll PASses = 2

TUBe PASses = n, where n = an even number (2, 4, 6, or 8)

Note 1: The only multiple shell heat exchanger configuration that can be rated in series is a shell type E and only two shells may be specified. The number of tube passes must be even.

Note 2: The normal configuration for two E shells in series would be counter current flow. This requires these additional commands:

INLet = SAMe

TUBe FEEd = 2

DESIGN II Example Input

```
AB123.
*
FLASH 1 = FLSH,1,-2,-3
HEAT EXCHANGER 2 = G-GX,3,7,-4,-15,
C-  DELTA TEMPERATURE = -5,
   RATE,
   SHELL DIAMETER = 1.9,
   SHELL FOULING FACTOR = 0.001,
   SHELL PASSES = 2
   EXCHANGER TYPE = AES,
   TUBE LAYOUT = TRIANGLE,
   TUB PASS = 2
   TUBE BWG = 18,
   TUBE OUTSIDE DIAMETER = 0.07,
   TUBE LENGTH = 15.,
   TUBE PITCH = 0.09,
   TUBE MATERIAL = ADM
   TUBE FOULING FACTOR = 0.001,
   NUMBER OF TUBES = 160,
   NUMBER OF SEALING STRIPS = 2,
   METHOD = KERN,
   BAFFLE SPACING = 0.4,
   BAFFLE CUT = 0.25
GEN
   COM = 2,3,4,5,6,7,8,10,11,12,100,62
   AMB100 = 300, API100 = 40, NAM100 = C8+
   FLO1 = 500,500,300,60,40,30,30,20,20,10,5,100
   TP1 = 0,900
   FLO(KG/HR)7 = 50,100,2000,100,53,10
   TP(K,ATM)7 = 200,13.6
   NO IMM
END
```

Output Changes

In response to requests from our customers, we have changed the output format for heat exchangers. The changes are:

- Temperature profile plots for E and F shell type single phase rating calculations. Previously this was only available for two phase rating calculations (see Figure 5).

- Rating table and temperature profile plots now appear in the equipment summary where previously they were printed in the "NOW CALLING" section of the output. This information can still be printed in the "NOW CALLING" section by using the following two heat exchanger commands:

  PRInt RATing

  PLOt ON

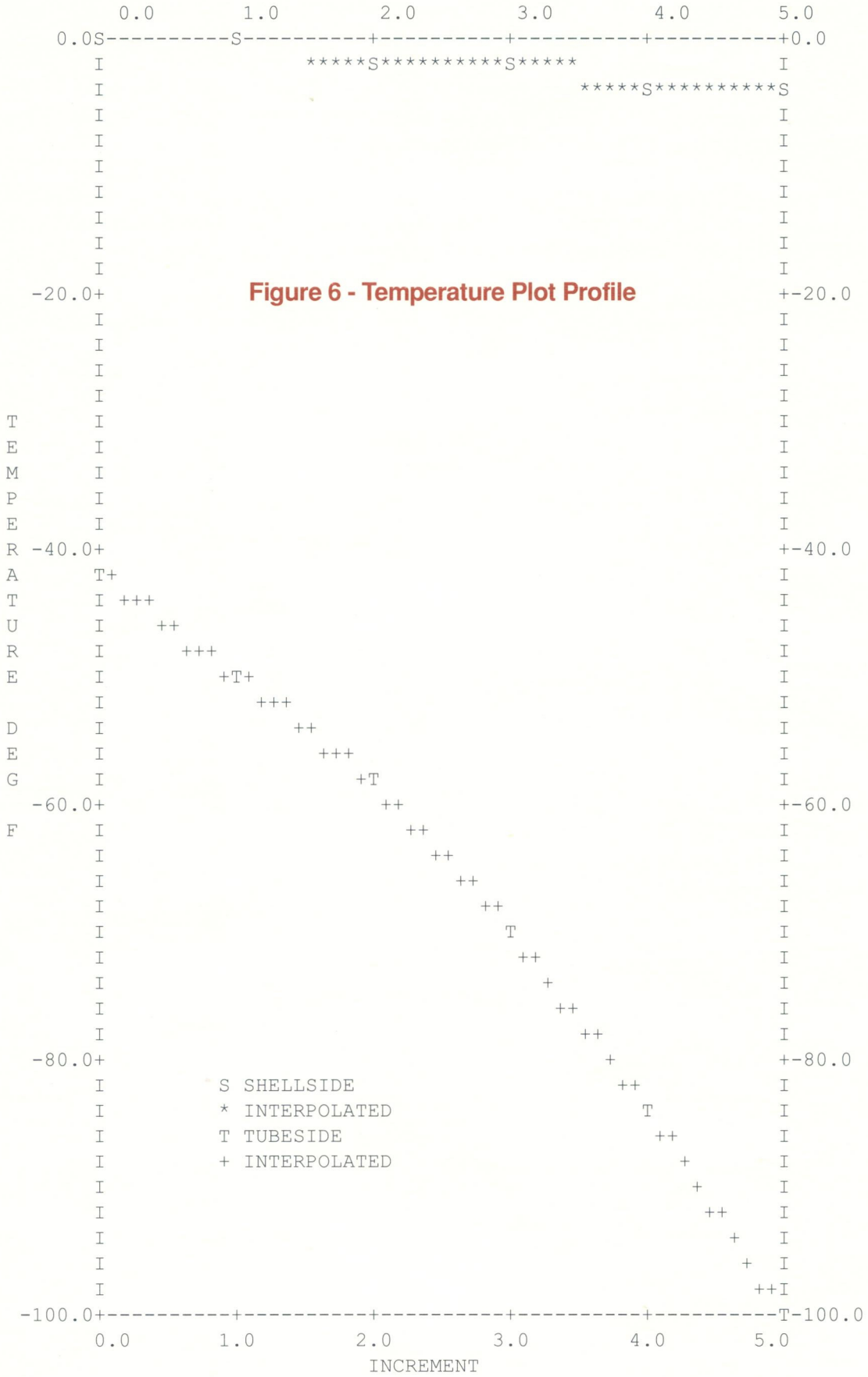

Figure 6 - Temperature Plot Profile

UNIFAC VLE UPDATE

Overview

ChemShare has updated the UNIFAC group contribution method for estimating liquid phase activity coefficients to reflect current publications of group volume and surface parameters (R_k and Q_k) as well as revised interaction parameters (a_{mn} and a_{nm}). This update is included in both DESIGN II Version 5.0 and ChemTran Version 15.0.

The new VLE UNIFAC parameters are consistent with UNIFAC revision and extension 4 published by Rasmussen, et al. (1). Figure 4 shows all groups that can be estimated with this release of UNIFAC. While ChemShare has now updated its UNIFAC parameters, we will support our previous parameters for customers who needs consistency with previous work. ChemShare's previous UNIFAC parameters were consistent with UNIFAC revision 3 published by Macedo, et al. (2).

See Figure 4 to determine if UNIFAC contains VLE group parameters are available for your chemical system.

DESIGN II General Section and ChemTran Keywords

To specify the UNIFAC method VLE use:

UNIFACK

To specify the UNIFAC parameter libraries use:

VLE UNIFAC = 2	specifies UNIFAC Version 4 parameters (default)
VLE UNIFAC = 1	specifies UNIFAC Version 3 parameters

Using UNIFAC to Predict Both VLE and LLE

Since UNIFAC parameters are different for predicting VLE and LLE, the user must specify either UNIFACK or LL UNIFACK in the general section. If a flow sheet requires UNIFAC to estimate both VLE and LLE phase behavior, use either UNIFACK or LL UNIFACK as a general section command and specify the other using the KKEY = command in the unit operation where required. Both VLE and LLE parameter libraries may be specified in the general section. See the example input file below.

Note: The VLE UNIFAC default has been changed from UNIFAC revision 3 to UNIFAC revision 4. Since many of the group interaction parameters have been changed, your results may change. If you require your results to be consistent with previous work you must specify the previous UNIFAC revision by using the GENeral section command VLE UNIFAC=1.

DESIGN II Example Input

```
AB123.
* USE OF VLE AND LLE UNIFAC
HEAt EXChanger 1 = E101, 1, -2
   TEMperature OUT = 100
   MULtiple PHAse 2 = V101, 2, -3, -4, -5
C-   Specify use of LLE UNIFAC parameters
   KKEY = LL UNIFACK

GENERAL SECTION
   COMponents = 62, 40, 41, 45
C-   Specify use of VLE UNIFAC parameters
   UNIFACK
C-   Load VLE and LLE UNIFAC parameters databanks
   VLE UNIFAC = 2
   LLE UNIFAC = 1
   FLOwrate 1 = 100, 100, 100, 100
   TP 1 = 70, 14.7
END
```

Note: For clarity, keywords are shown with their complete spellings using capitals and lowercase letters. Only those letters shown in CAPitals are actually required by DESIGN II.
If complete keywords are used, they must be in all CAPITALS as DESIGN II is case sensitive and will not accept lowercase letters in input files.

References

1. Rasmussen, P., Tiegs, D., Fredenslund, A., and Gmehling, J., "Vapor-Liquid Equilibria by UNIFAC Group Combination. 4. Revision and Extension", *Industrial Engineering and Chemical Research*, Volume 26, 1987.

2. Macedo, E. A., Weidlich, V., Gmehling, J., and Rasmussen, P., "Vapor-Liquid Equilibria by UNIFAC Group Combination. Revisions and Extension 3", *Industrial Engineering and Chemical Process Design and Development*, Volume 22, 1983.

Figure 7

UNIFAC VLE Group Table
UNIFAC Revision and Extention 4

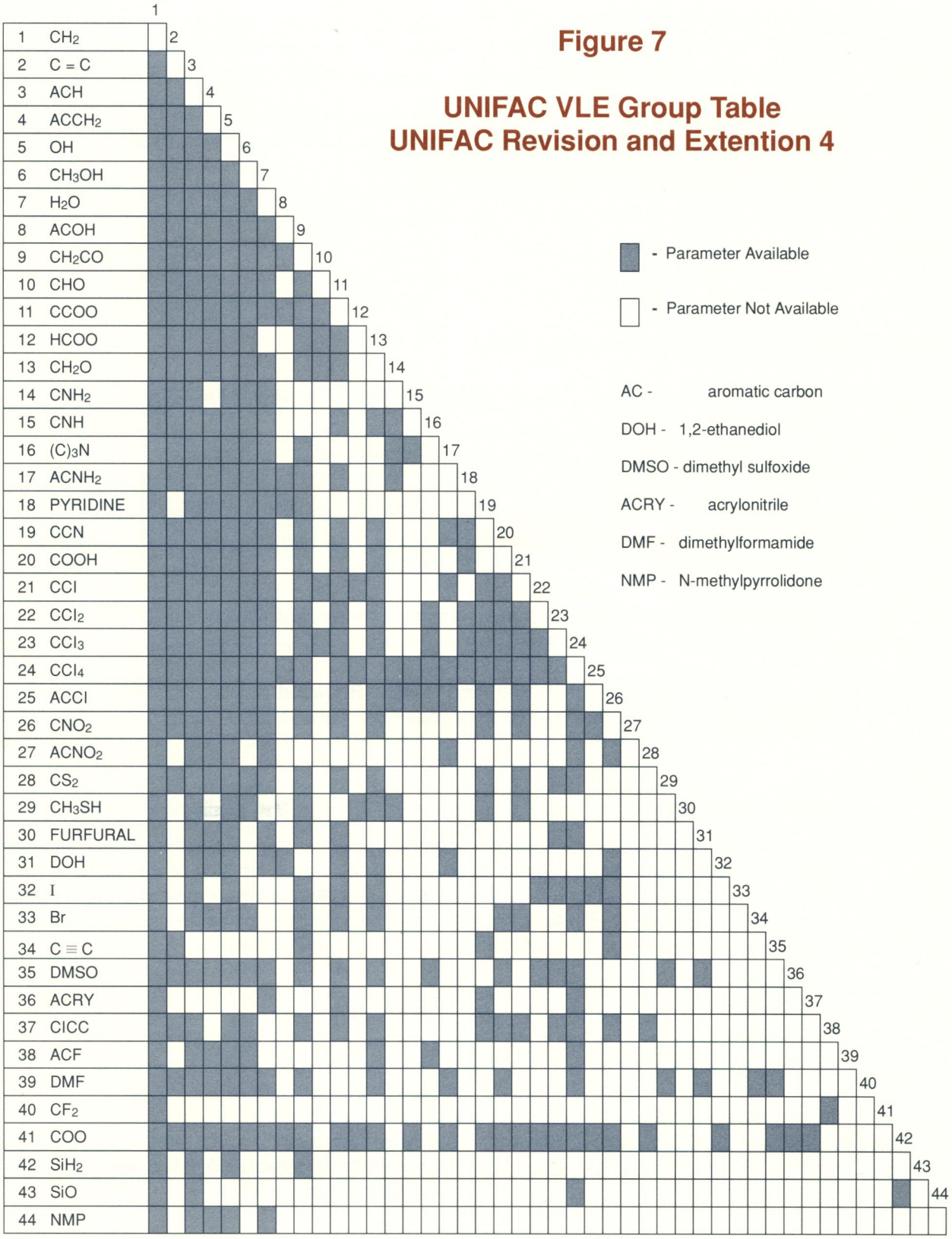

- Parameter Available

- Parameter Not Available

AC - aromatic carbon

DOH - 1,2-ethanediol

DMSO - dimethyl sulfoxide

ACRY - acrylonitrile

DMF - dimethylformamide

NMP - N-methylpyrrolidone

CRUDE STREAM CHARACTERIZATION AND PROPERTIES EXTENSION

Overview

DESIGN II Version 5.0 includes extensive improvements to its crude characterization. ChemShare has responded to the needs of our customers by providing the most flexible and accurate crude characterization available. Improvements include increased crude stream boiling point curve resolution, increased number of properties that can be characterized, expanded units of measure, and user access to pseudocomponent characterization. These changes provide the rigorous characterization required for the most exacting applications.

Extension of Existing Crude Stream Properties

The current crude stream properties have been enhanced to allow more input data in the following ways:

- The maximum number of input data points for any TBP and ASTM temperature, gravity and molecular weight feed curve has been increased from 40 to 75.

- The maximum number of input crude property and viscosity values has been increased from 4 sets to 15 sets. Because of this change the input keywords have changed and are shown below. In particular the word "STR" is required as part of the command.

- The list of available input viscosity units for crude stream characterization has been expanded to include the following keywords (and description):

  CST (centistokes, default units), RE1 (Redwood 1), RE2 (Redwood 2), SUS (Saybolt Universal Seconds), and SFS (Saybolt Furol Seconds).

Property and Viscosity Sets

A crude stream characterization may require the entry of property data such as viscosity, sulfur content, nitrogen content, or pour point. DESIGN II provides the ability to enter properties as a function of the crude volume percent. See DESIGN II User's Guide, Section 8.0 (page 8.1.26) for complete details. Previously, the viscosity versus volume percent data entry was limited to 4 data sets. This has been expanded and the user can now enter up to 15 viscosity and property sets per feed stream.

DESIGN II Keyword Commands

FEEd VIScosity SET h (units) STReam j	= viscosities at each mid-volume percent of set "h" for stream "j"
FEEd VIScosity VOLume SET h STReam j	= mid-volume percents
FEEd BULk VIScosity SET h (units) STReam j	= bulk stream viscosity
FEEd VIScosity TEMperature (units)	= temperatures corresponding to first, second, third, etc. viscosity set

where h may now range from 1-15.

Note: The keyword phrase has changed to denote which stream the data set applies to. The STReam j is now required if h is greater than 9.

The FEEd PROperty SET command is used to characterize any other property that you wish to track. Previously DESIGN II limited the number of property sets to 4 per feed. This has been increased to 15 property sets. Again, the keyword STReam j is required when h is greater than 9. The same number and type of property sets must be entered for all crude feeds.

DESIGN II Keyword Commands

FEEd PROperty SET h (mix rule) STReam j	=	name, properties at each mid-volume percent
FEEd PROperty VOLume SET h STReam j	=	mid-volume percents
FEEd BULk PROperty SET h STReam j	=	bulk stream property

Enter Component-by-Component Crude Stream Properties

Three new CRUde section commands allow the user to enter pseudocomponent properties (such as sulfur content, cloud point, metals content, pour point, etc.) and viscosities. Previously, only property versus volume and viscosity versus volume curves could be entered to describe feed properties. From the curves DESIGN II will assign the property and viscosity values to the feed pseudocomponents. Now for extra flexibility the user can assign the values to the pseudocomponents directly.

New Component-by-Component Property Commands

The following new commands allow component-by-component entry of these properties:

FEEd PSEudocomponents j = list volume percent of each pseudocomponent in stream j
FEEd COMponent VIScosity SET h (units) STReam j = list viscosity of each pseudocomponent in stream j
FEEd COMponent PROperty SET h (mix rule) STReam j = name, list property of each pseudocomponent in stream j

where:

h	=	set number. Maximum of 15 sets.
j	=	stream number
units	=	dimensional units for viscosities, either CST (default), RE1, RE2, SUS, or SFS
mix rule	=	either MOLe, MASs, VOLume, or PPT (Pour PoinT)
name	=	16 character user-assigned property name. Each feed must use the same name for a given set. No commas allowed in the name.
STReam	=	required keyword only if h > 9, otherwise it is optional.

Note: The CUTS = and FEEd COMponent GRAvity = commands are also required to use the FEEd PSEudocomponent command.

How to Enter Component-by-Component Properties

The guidelines below outline what commands are required and what commands are optional when defining a stream with component-by-component properties.

The following commands are required:

```
CRUde
    CUT=                              (mean average boiling points for all pseudocomponents)
    FEEd COMponent GRAvity j =        (or FEEd COMponent GRAvity = )
    FEEd PSEudocomponents j =         (Volume % for each pseudocomponent in stream j)

    TP j =
    FEEd rate j =
```

The following commands are required to define viscosity:

```
    FEEd COMponent VIScosity SET h STReam j =
    FEEd VIScosity TEMperature =
```

The following command is required to define other properties:

```
    FEEd COMponent PROperty SET h STReam j =
```

The following commands are optional:

```
    FEEd COMponent MOLe weight j =        (or FEEd COMponent MOLe weight = )
    FEEd NAMe j =
```

Note: For clarity, keywords are shown with their complete spellings using capitals and lowercase letters. Only those letters shown in CAPitals are actually required by DESIGN II.
If complete keywords are used, they must be in all CAPITALS as DESIGN II is case sensitive and will not accept lowercase letters in input files.

Restrictions on Component-by-Component Property Commands

The following restrictions apply:

1. Each feed must have the same number of property and viscosity sets.

2. It is permissible to use FEEd COMponent PROperty SET and FEEd PROperty SET in the same run, as long as only one is entered for a given feed. The same applies to FEEd COMponent VIScosity SET and FEEd VIScosity SET.

3. For any given property set, the same mixing rule option and property name must be used for all feeds.

4. The VIScosity TEMperature command applies to all viscosity sets and should have one value entered for each viscosity set.

COMPRESSOR ENHANCEMENTS

Version 5.0 contains two improvements to the COMPREssor unit operation. The COMPREssor model now calculates polytropic head and polytropic coefficient. The polytropic head is always calculated and the polytropic coefficient is calculated when requested with a keyword command. Both of these values are displayed in the equipment summary section of the output. If the ENTropy option is selected, neither the polytropic head nor the polytropic coefficient is calculated.

DESIGN II Keyword Command

CALculate POLytropic Coefficient

Note: In the absence of this command, the polytropic coefficient defaults to 0.22.

DESIGN II Example Input

```
COMPREssor 1 = COM, 1, -2
   CALculate POLytropic effeciency
   PREssure OUT = 35
```

Note: For clarity, keywords are shown with their complete spellings using capitals and lowercase letters. Only those letters shown in CAPitals are actually required by DESIGN II.
If complete keywords are used, they must be in all CAPITALS as DESIGN II is case sensitive and will not accept lowercase letters in input files.

Simulation Results

```
          + EQUIPMENT SUMMARY - INDIVIDUAL DETAILS +
****PUMP/COMPRESSOR/EXPD****
EQUIPMENT NO.          1
EXTERNAL NAME        COM
COMP. STAGES         1.000
WORK CAPACITY
  HP               1.00000E 06
OUTLET PRES.
  PSIA              35.000
DRIV TYPE           ELECTRIC
COMP TYPE           POLY
POLY COE            0.3761
THERMAL EFFIC.      0.7200
POLYTROPIC HEAD
  FT                27118.
KW USAGE             39.74
REAL WORK HP        -53.32
```

FLASH ENHANCEMENTS

Two enhancements have been made to the FLAsh model. Multiple feed streams can now be specified. Previously it was necessary to use a mixer upstream of the FLAsh to combine multiple feed streams. Also, a pressure drop specification may be used. Previously only an outlet pressure could be specified.

DESIGN II Keyword Command

DELta pressure (units) =

Specifies the pressure drop across the flash vessel.

Example:

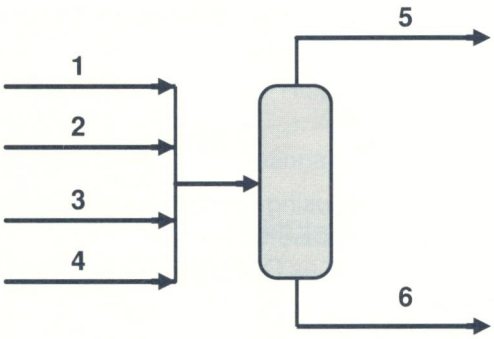

Note: The feed pressure will always be the pressure of the inlet stream with the lowest pressure.

```
FLAsh 1 = V101, 1, 2, 3, 4, -5, -6
DELta pressure (PSIA) = 55
```

Note: For clarity, keywords are shown with their complete spellings using capitals and lowercase letters. Only those letters shown in CAPitals are actually required by DESIGN II.
If complete keywords are used, they must be in all CAPITALS as DESIGN II is case sensitive and will not accept lowercase letters in input files.

INLINE FORTRAN EXTENSIONS AND ENHANCEMENTS

ChemShare offers a unique capability that provides the user the ability to interface with the flowsheet model through the use of FORTRAN. This feature is called Inline FORTRAN and allows the user to access flowsheet parameters and set unit operation specifications by placing FORTRAN commands directly in the input file. The compiling and linking of this code is completely transparent to the user. See DESIGN II User's Guide section 9.0 for complete instructions on how to use Inline FORTRAN.

Version 5 includes the following improvements to Inline FORTRAN.

- The flow sheet variables that are accessible to Inline FORTRAN have been greatly expanded.
- Two new subroutines have been added to allow the calculation of more stream properties.
- Character data can now be placed in DATA statements.

Flowsheet Variable Access Extension

Inline FORTRAN can now access nearly 400 flowsheet variables. Version 5.0 has extended Inline FORTRAN to the REFine unit operation and also expands the list of accessible parameters for other DESIGN II modules. This will make ChemShare's already unique capability even more useful.

Table 6 is a complete list of equipment and stream parameters available to Inline FORTRAN and CASe studies. All parameters shown are available to the Inline FORTRAN command GET and the CASestudy commands TABle, PLOTX, and PLOTY. Only those marked with a "◊" are available to the Inline FORTRAN SET command and the CASestudy STEp and CHAnge commands.

Physical Property Subroutines

Version 5.0 Inline FORTRAN includes two new subroutines that allow the user to calculate a pure component vapor pressure and heat capacity for liquid or vapor mixtures. Refer to the DESIGN II User's Guide, page 9.1.41, for a list of the other subroutines that calculate thermodynamic properties.

Vapor Pressure

To calculate pure component vapor pressure use the following subroutine:

VAPRES (I, T, VP)

where:

I = Component position in the COMponent list (not component ID number)
T = Temperature, degrees Rankine
VP = Vapor pressure, PSIA

To calculate the heat capacity of a mixture, use the following subroutine:

```
HCAPAC (XMOL, T, P, CP, CV, IPHASE, KEY, JERR)
```

where

XMOL = Molar composition array (dimensions to number of components)
T = Temperature degrees Rankine
P = Pressure, PSIA
CP = Heat capacity at constant pressure, BTU/lbmol/R
CV = Heat capacity at constant volume, BTU/lbmol/R
IPHASE = 1 for vapor, 2 for liquid
KEY = 0 for Cp and Cv calculation, 2 for Cp calculation only
JERR = 0 for no error occurred, >0 for error flag

Character Data

Inline FORTRAN can now read character data using the Hollerith data format

Example:

```
      INTEGER ITEXT (10)
      DATA ITEXT/4HINLI,4HNE F,4HORTR,4HAN M,4HAKES,4H DES,4HIGN ,4HII U,4HNIQU,4HE    /
      WRITE (6, 100) (ITEXT (I), I=1,10)
100   FORMAT (X,10A4)
```

Results:

```
INLINE FORTRAN MAKES DESIGN II UNIQUE
```

Table 6

Flowsheet Parameters Available to Inline FORTRAN and CASe studies

The following is a complete list of equipment and stream parameters available to Inline FORTRAN and CASe studies. All parameters shown are available to the Inline FORTRAN command GET and the CASestudy commands TABle, PLOTX, and PLOTY. Only those marked with a "◊" are available to the Inline FORTRAN SET command and the CASestudy STEp and CHAnge commands. Dimensional units shown are the DESIGN II internal units in which the value is stored. Special cases are denoted with an asterisk, "*".

Module / Keyword	Parameter Description	Units
ADD block		
◊ **EQP**ar (i)	"ith" parameter for ADD block equipment list	*
* as defined by user		
COMponent **SPL**itter		
◊ REC TOP(i)	Flowrate or fraction of "ith" component in 1st outlet	*
◊ TEM BOT	Temperature of second outlet	R
◊ TEM COO	Temperature of cooling fluid	R
◊ TEM HEA	Temperature of heating fluid	R
◊ TEM TOP	Temperature of first outlet	R
* Default is molar fraction, otherwise flow units as specified in input.		
COMPREssor		
CAL ELE *	Calculated electricity usage	KW
CAL FUE *	Calculated fuel gas usage	SCF/HR
CAL STE *	Calculated steam usage	LB/HR
CAL WAT	Calculated cooling water (multistage)	GAL/HR
CAL WOR	Calculated work required	HP
◊ EFF	Efficiency	----
◊ POL COE	Polytropic coefficient	----
◊ PRE OUT	Final discharge pressure	PSIA
◊ PRE STA (i)	Discharge pressure for stage (i)	PSIA
◊ STA	Number of stages (10 maximum)	----
◊ STE IN	Driver inlet steam enthalpy	BTU/LBMOL
◊ STE OUT	Driver outlet steam enthalpy	BTU/LBMOL
◊ TEM BUB	Temperature for spec PRE OUT at BUB PT	R
◊ TEM DEW	Temperature for spec PRE OUT at DEW PT	F
◊ TEM INT	Temperature interstage cooler	R
◊ WOR AVA	Available work	HP

COMPREssor (continued)

	CAL POL	Calculated polytropic coefficient	----
	DUT INT (i)	"ith" stage intercooler duty	BTU/HR
	POL HEA	Polytropic head	FT
◊	POLytropic FLAg	Polytropic head	0 = User input value 1 = Calculate in program
	POL STA (i)	"ith" stage polytropic coefficient	----
	TEM SUC (i)	"ith" stage suction temperature	R
	TEM DEL (i)	"ith" stage delivery temperature	R
	VAP WT (i)	"ith" stage mass flow rate	LB/HR
	VOL SUC (i)	"ith" stage suction volumetric flow	FT3/HR
	WOR STA (i)	"ith" stage work	BTU/HR

* Only one of these three will be calculated per compressor as determined by the input keyword.

DEPressuring

◊	BAC	Backpressure	PSIA
◊	COE	Coefficient of discharge	----
◊	CRO	Cross section of valve	FT2
◊	DIA	Diameter of vessel	FT
◊	ENV	Environment factor	----
◊	HEA	Heat addition	BTU/HR
◊	RED	Final pressure after blowdown	PSIA
◊	SET	Set pressure for valve to open	PSIA
◊	LEN	Length of vessel	FT
◊	LIQ HEI	Liquid height	FT
◊	TIM STE	Time step	HR

DIStillation

	CAL DUT CON	Calculated condenser duty	BTU/HR
	CAL DUT REB	Calculated reboiler duty	BTU/HR
	CAL MAX DIA	Maximum diameter from Smith-Dresser Ohlswager	FT2
	CAL NOR	Norm (error analysis)	----
	CAL PRO (i)	Calculated "ith" product	*
	CAL REF	Calculated reflux ratio	----
	CAL TEM TOP	Calculated temperature for top product	R
	CAL TEM BOT	Calculated temperature for bottom product	R
	COM CON (i)	Compositional convergence	----
	DEC COM	Decant component identification number	----
◊	DEC RAT	Estimate for decant rate	LBMOL/HR
	DEC REF	Molar fraction solubility in reflux	----
◊	DEL	Pressure drop through column	PSI

DIStillation (continued)

◊	DTS	Change in delta temperature for column profiles (convergence control)	----
◊	DUT CON	Specified condenser duty	BTU/HR
◊	DVS	Change in delta V for profile; average factor (SUPer)	----
	EXT COM	Identification number for extractive component	----
◊	HEA (i)	Heat added/removed from "ith" heater/cooler	BTU/HR
◊	HEA KEY	Heavy key component identification number	----
	IMM	Immiscible component identification number	----
◊	LIG KEY	Light key component identification number	----
◊	LOC FEE (i)	Feed tray location for "ith" feed	----
◊	LOC HEA (i)	Heater/cooler location for "ith" heater	----
◊	LOC INT (i)	Location for "ith" intercooler	----
◊	LOC SID (i)	Location of "ith" side draw	----
	MAX DIM	Maximum dimension for matrix	----
◊	MAX MAT	Maximum number of matrix inversions	----
◊	PRE CON	Condenser pressure	PSIA
◊	PRE TOP	Top tray pressure	PSIA
◊	PRI SWI	Column output print control	----
◊	PRO (i)	Rate for "ith" product	LBMOL/HR
◊	REB	Specified reboiler duty	BTU/HR
◊	REF	Reflux ratio	----
◊	REF GUE	Guess for reflux ratio	----
◊	SPE (i)	"ith" SUPER specification **	----
◊	TEM BOT	Guess for bottom product temperature	R
◊	TEM CHI	Presaturator chiller temperature	R
◊	TEM CON SUB	Degrees of subcooling for total condenser	R
◊	TEM CON	Condenser temperature	R
◊	TEM INT (i)	Temperature for "ith" intercooler	R
	TEM PRO (i)	"ith" value from temperature profile	R
◊	TEM REB	Specified reboiler temperature	R
◊	TEM TOP	Guess for bottom product temperature	R
◊	THE	Mol fraction vaporized from thermosiphon reboiler	----
◊	TOL	Tolerance for column convergence	----
	TRA	Number of trays	----
◊	TST	Max temperature step, max % changes in vapor	----
	VAPPRO (i)	"ith" value from vapor profile	LBMOL/HR

* Default is lbmol/hr; if FRA specified, value is fraction of total feed.

** RATio, RECovery, PURity, and TOTal PROduct specification only.

DIVider

◊	FLO RAT (i)	Flowrate of "ith" outlet	*

* Default is molar fraction; otherwise flow units as specified by user in input.

EQUilibrium **REA**ctor

◊	EXT (i)	Extent completion of reaction number i	----
	INE (i)	ID number of "ith" inert component	----
◊	TEMREA (i)	Approach to equilibrium temperature for reaction number (i)	R

EXPander

	CAL WOR	Calculated work produced	HP
◊	EFF	Adiabatic efficiency	----
◊	PRE OUT	Final discharge pressure	PSIA

FIRed heater

	CAL FUE	Calculated fuel usage	SCF/HR
	CAL HEA ABS	Calculated heat absorbed	BTU/HR
◊	DEL	Process stream pressure drop	PSI
◊	EFF	Fuel efficiency	----
◊	HEA VAL FUE	Heating value of fuel	BTU/LBMOL
◊	RAT HEA	Rating of fired heater	BTU/HR
◊	TEM OUT	Temperature of stream out	R

FLAsh

	CAL DUT	Calculated duty	BTU/HR
◊	DEL	Pressure drop	PSI
◊	HEA	Heat addition	BTU/HR
◊	LIQ FRA	Specified liquid fraction	*
◊	OIL ENT WAT	Fraction (W, M, V) oil in water	**
◊	PRE OUT	Pressure	PSIA
◊	TEM EXC	Temperature exchange	R
◊	TEM OUT	Temperature	R
◊	WAT ENT OIL	Fraction (W, M, V) water in oil	**

* mole fraction stored as (+), mass fraction stored as (–)

** value <10 implies mole fraction
10<value<20 implies mass fraction; true value = value -10.
value>20 implies volume fraction; true value = value -20.

HEAt EXChanger

◊	ARE	Area	FT2
◊	BAF CLE	Baffle clearance	FT
◊	BAF CUT	Baffle cut	----
◊	BAF SPA	Baffle spacing	FT
◊	CUR INC	Curve increments	----
	CAL ARE	Calculated area	FT2
	CAL DUT	Calculated duty	BTU/HR
	CAL WAT	Calculated cooling water for single stream exchanger	GAL/HR
◊	DEL (i)	Pressure drop shell, tube	PSI
◊	DEL TEM	1st outlet temperature - 1st inlet temperature	R
◊	DUT	Duty	BTU/HR
◊	INL	Inlet flag	0 = Same 1 = Opposite
	LOG MEA TEM	Log mean temperature difference	R
◊	MAX ITE	Maximum iteration for rating calculation	----
◊	MIN TEM	Minimum temperature approach	R
◊	NUM INC	Number of Increments	----
◊	NUM TUB	Number of tubes	----
◊	NUM SEA	Number of sealing strips	----
◊	PRE REF	Pressure of refrigerant stream	PSIA
◊	REF ID	Refrigerant identification number	----
◊	SHE	Number of shells	----
◊	SHE DIA	Shell diameter	FT
◊	SHE FOU FAC	Shell fouling factor	1/(BTU/HR/FT2/R)
◊	SHE PAS	Number of shell passes	----
◊	TEM APP	2nd inlet temperature - 1st outlet temperature	R
◊	TEM EXC	Temperature exchange	R
◊	TEM OUT	Temperature out for 1st inlet stream	R
◊	TEM REF	Temperature of refrigerant stream	R
◊	TEM WAT IN	Temperature cooling water in	R
◊	TEM WAT OUT	Temperature cooling water out	R
◊	TOL	Tolerance for rating	----
◊	TUB BUN	Tube bundle diameter	FT
◊	TUB BWG	Tube BWG	----
◊	TUB FEE	Tube feed	----
◊	TUB FOU	Tube side fouling factor	1/(BTU/HR/FT2/R)
◊	TUB INS	Tube inside diameter	FT
◊	TUB LAY	Tube layout flag	1 = Triangular 2 = Square 3 = Rotated triangle 4 = Rotated square

HEAt **EXC**hanger (continued)

◊	TUB LEN	Tube length	FT
◊	TUB OUT	Tube outside diameter	FT
◊	TUB PAS	Number of tube passes	----
◊	TUB PIT	Tube pitch	FT
◊	TUB WAL	Tube wall thickness	FT
◊	TUB FLO	Flow direction flag	0 = Up 1 = Down
◊	U	Heat transfer coefficient	BTU/HR/FT2/R
◊	VER	Vertical flag	0 = Horizontal 1 = Vertical

HYdro**TR**eater

◊	ARO CON	Aromatic mole fraction converted	----
◊	ARE REA	Fraction aromatics converted to saturated hydrocarbons	----
◊	BED	Estimated number of beds	----
◊	CON DRO	Temperature drop between beds	R
◊	CON RIS	Temperature rise between beds	R
◊	MAX	Maximum number of beds	----
◊	NIT CON	Nitrogen weight fraction	----
◊	NIT REA	Fraction nitrogen converted to ammonia	----
◊	OLE CON	Olefin mole fraction	----
◊	OLE REA	Fraction olefins converted to saturated hydrocarbons	----
	OPT DRO	Temperature drop option (0, 1)	----
	OPT QUE	Quench option (0, 1)	----
	OPT RIS	Temperature control option (0, 1, 2)	----
◊	PRE DRO	Pressure drop per bed (0, 1, 2)	----
◊	PRE QUE	Pressure for quench stream	PSIA
◊	PRI	Print option (0, 1, 2)	----
◊	SUL CON	Sulfur weight fraction	----
◊	SUL REA	Fraction sulfur converted to hydrogen sulfide	----
◊	TEM DRO (i)	Temperature drop for OPT DRO = 1	R
◊	TEM QUE	Temperature of quench stream	R
◊	TEM RIS (i)	Temperature rise per bed	R

LINE pressure drop

	CAL DEL FRI	Calculated delta pressure due to friction	PSI
	CAL DEL ELE	Calculated delta pressure due to elevation	PSI
◊	DRA	Drag	----
◊	EFF	Efficiency	----
◊	ELE (i)	"ith" node equivalent length	FT
◊	EQU (i)	"ith" node equivalent length	FT
◊	FLO DIR	Flow direction	flag

LINE pressure drop (continued)

◊	INS DIA (i)	"ith" node inside diameter	FT
◊	LEN (i)	"ith" node length	FT
◊	NOM DIA (i)	"ith" node nominal diameter	FT
◊	TEM SUR (i)	"ith" node temperature of surroundings	R
◊	U (i)	"ith" node heat transfer coefficient	BTU/HR/FT2/F
◊	ROU	Roughness	FT

LNG exchanger

◊	ARE (i)	Area per shell	FT2
	CAL ARE (i)	Calculated area for tube i	FT2
	CAL DUT (i)	Calculated tubeside duty	BTU/HR
	CAL DUT SHE (i)	Calculated duty shell (i)	BTU/HR
	CAL DUT TUB (i)	Calculated duty tube (i)	BTU/HR
	CAL LMT (i)	Calculated LMTD (i)	R
	CAL MIX TEM	Temperature shell feed after tubeside recycle	R
	CAL TOT ARE	Calculated total area	FT2
	CAL TOT DUT	Calculated total duty	BTU/HR
◊	DEL SHE (i)	Pressure drop shell stream (i)	PSI
◊	DEL TUB (i)	Pressure drop tube stream (i)	PSI
◊	DUT (i)	Duty tubeside stream (i)	BTU/HR
	REC STR	Number of tubeside streams recycled to shellside feed	----
◊	SHE	Number of shells	----
◊	SHE PAS	Number of passes per shell	----
	SHE STR	Number of shellside streams	----
◊	TEM APP (i)	Shell inlet temperature - tubeside outlet stream (i) temperature	R
◊	TEM OUT (i)	Outlet temperature of tubeside stream (i)	R
◊	TEM OUT SHE	Temperature out for shell stream(s)	R
◊	TOT DUT	Shellside total duty	BTU/HR
◊	TUB PAS	Number tube passes/shell	----
◊	U (i)	Heat transfer coefficient for tubeside stream (i)	BTU/HR/FT2/F

NOTE: The stream position number is (i).
Recycle tubeside stream(s) are coded as the first stream(s). Next, the remaining tubeside stream(s) are coded. Finally, the shellside stream(s) are coded.
Only one shellside stream is allowed if any tubeside stream is recycled.

POLytropic compressor

	CAL DIS TEM	Calculated discharge temperature	R
	CAL DIS PRE	Calculated discharge pressure	PSIA
	CAL POL EFF	Calculated polytropic efficiency	----
	CAL POL HEA	Calculated polytropic head	HP
	CAL SUC VOL	Calculated suction volume	FT3/MIN
◊	PRE OUT	Outlet pressure	PSIA
◊	SPE	Radial speed	RPM
◊	THE FAC	Thermodynamic factor	----
◊	TOL	Convergence tolerance	----

PUMp

	CAL ELE *	Calculated electricity usage	KW
	CAL FUE *	Calculated fuel gas usage	SCF/HR
	CAL STE *	Calculated steam usage	LB/HR
	CAL WOR	Calculated work required	HP
◊	EFF	Efficiency	----
◊	PRE OUT	Final discharge pressure	PSIA
◊	STE IN	Driver inlet steam enthalpy	BTU/LBMOL
◊	STE OUT	Driver outlet steam enthalpy	BTU/LBMOL
◊	TEM BUB	Temperature for specification PRE OUT at BUB PT	R
◊	TEM DEW	Temperature for specification PRE OUT at DEW PT	R
◊	WOR AVA	Work available	HP

* Only one of these three can be accessed per pump as determined by the module keywords: ELE DRI, FUEL, or STE IN/STE OUT.

REFIne

General Column Parameters

◊	DEL (i)	Delta pressure	PSI
◊	DUT	Duty of condenser	BTU/HR
	FEE TEM (i)	Feed heater outlet temperature	R
	FEE FUR (i)	Furnace duty	BTU/HR
◊	LOC FEE (i)	Location of feeds	----
◊	PRE CON	Pressure of condenser	PSIA
◊	PRE TOP (i)	Pressure top (i)	PSIA
◊	PRO (i)	Product rate	*
◊	PRO GUE (i)	Product guess (i)	LBMOL/HR
◊	PRO OVE	Product overhead rate	LBMOL/HR

REFIne (continued)

General Column Parameters (continued)

◊	RATI	Reflux ratio	MOLE FRACTION
	REF RATE	Reflux Rate	LBMOL/HR
	STA (i)	Stages	----
◊	TEM BOT (i)	Temperature bottom	R
◊	TEM CON	Temperature of condenser	R
◊	TEM CON SUB	Temperature of condenser subcooling	R
◊	TEM CON GUE	Temperature of condenser guess	R
◊	TEM TOP (i)	Temperature top	R
	WAT	Decanted water	LBMOL/HR
	WAT DUT	Duty of condensed water	BTU/HR

CRUde Stream Properties

ASTM IBP	D 86 initial boiling point	F
ASTM 5PT	D 86 5% point	F
ASTM 10PT	D 86 10% point	F
ASTM 30PT	D 86 30% point	F
ASTM 50PT	D 86 50% point	F
ASTM 70PT	D 86 70% point	F
ASTM 90PT	D 86 90% point	F
ASTM 95PT	D 86 95% point	F
ASTM EP	D 86 end point	F
CUM VOL (i)	Cumulative volume	VOLUME %
FLA	Flash point	R
FLO	Molar flow rate	LBMOL/HR
POUR	Pour point	R
PRO SET (i)	Total stream property calculated on a molar basis	----
PRO SET WEI (i)	Total stream property calculated on a weight basis	----
PRO SET VOL (i)	Total stream property calculated on a volume basis	----
SP GR	Specific gravity	SPG
TBP IBP	TBP initial boiling point	F
TBP 5PT	TBP 5% point	F
TBP 10PT	TBP 10% point	F
TBP 30PT	TBP 30% point	F
TBP 50PT	TBP 50% point	F
TBP 70PT	TBP 70% point	F
TBP 90PT	TBP 90% point	F
TBP 95PT	TBP 95% point	F
TBP EP	TBP end point	F
VABP	Volume average boiling point	R
VIS SET (i)	The "ith" set of viscosity data at set temp	CST
VOL	Volumetric flow rate at stream temperature and pressure	FT3/HR

* LBMOL/HR, LB/HR, OR GAL/HR depending upon input being molar, mass or volumetric units

REFIne (continued)

Fix Parameters

◊	FIX GUE (i)	"ith" fix guess	LBMOL/HR
◊	FIX LIQ (i)	"ith" fix liquid rate	*
◊	FIX LIQ NET (i)	"ith" fix liquid net rate	LBMOL/HR
◊	FIX TEM (i)	"ith" fix temperature	R
◊	FIX VAP (i)	"ith" fix vapor rate	*

Heater and Stripping Steam Parameters

◊	HEA (i)	Heat added or removed	R
	LOC HEA (i)	Tray location of heaters	----
	LOC STE (i)	Tray location of steam	----
◊	PRE STE (i)	Pressure of steam	PSIA
◊	STE (i)	Steam rates	LBMOL/HR
◊	TEM STE (i)	Temperature of steam	R

Profile Parameters

	DEN LIQ (i)	"ith" tray density liquid	LBMOL/FT3
	DEN VAP (i)	"ith" tray density vapor	LBMOL/FT3
	ENT LIQ (i)	"ith" tray enthalpy liquid	BTU/HR
	ENT VAP (i)	"ith" tray enthalpy vapor	BTU/HR
◊	LIQ PRO (i)	"ith" tray liquid	LBMOL/HR
	MOL WEI LIQ (i)	"ith" tray molecular weight liquid	LB/LBMOL
	MOL WEI VAP (i)	"ith" tray molecular weight vapor	LB/LBMOL
	NET LIQ (i)	"ith" tray net liquid	LBMOL/HR
◊	PRE PRO (i)	"ith" tray pressure	PSIA
	SP GR VAP (i)	"ith" tray specific gravity vapor	SPG
	SP GR LIQ (i)	"ith" tray specific gravity liquid	SPG
◊	TEM PRO (i)	"ith" tray temperature	R
◊	VAP PRO (i)	"ith" tray vapor	LBMOL/HR

Pumparound Parameters

◊	CHA PUM (i)	Change of pumparound temperature	R
◊	HEA PUM (i)	Heat from pumparound	BTU/HR
	LOC PUM (i)	Tray location of pumparounds	----
	LOC PUM WAT (I)	Tray location of pumparounds for water	----
◊	PRO PUM (i)	Product of pumparound	*
◊	TEM PUM (i)	Temperature of pumparound	R

REFIne (continued)

Reboiler Parameters

◊	REB (i)	Reboiler duty	BTU/HR
◊	REB DEL (i)	Reboiler return delta pressure	PSI
◊	REB EX VAP (i)	Reboiler exit vaporization	WEIGHT%
◊	REB FLO (i)	Reboiler flowrate	LBMOL/HR
◊	REB TEM (i)	Reboiler temperature	R
	REB TYP (i)	Reboiler type	----
◊	REB VAP GUE (i)	Reboiler vapor guess	LBMOL/HR

Side Stripper Parameters

◊	CHA RET (i)	Change in return temperature	R
◊	DRA (i)	Draw rates to stripper	LBMOL/HR
◊	HEA RET (i)	Heat from liquid return	BTU/HR
	LOC DRA (i)	Tray location of draws	----
	LOC LIQ (i)	Tray location of liquid returns	----
	LOC VAP (i)	Tray location of vapor returns	----
◊	PRO STR (i)	Product from stripper	*
◊	PRO STR GUE (i)	Product from stripper guess	LBMOL/HR
◊	RET (i)	Return flow from stripper	LBMOL/HR
◊	TEM RET (i)	Temperature of liquid return	R

Tray Sizing Parameters

◊	GLI DIA (i)	"ith" Glitsch diameter specification	FT
◊	GLI PER (i)	"ith" Glitsch percent flood specification	%
◊	GLI PAS (i)	"ith" Glitsch passes specification	----
◊	GLI SPA (i)	"ith" Glitsch spacing specification	FT
◊	GLI SWA (i)	"ith" Glitsch swage trays specification	----
◊	GLI SYS (i)	"ith" Glitsch system factor specification	FRACTION

Other Parameters

	CON FLAG	Convergency flag	----
◊	MAX MAT	Maximum matrices	----
◊	REP (i)	Reports	----
◊	SWI	Switch	----
◊	TOL	Tolerance	----

SHOrtcut fractionator

	CAL DUT CON	Calculated condenser duty	BTU/HR
	CAL DUT REB	Calculated reboiler duty	BTU/HR
	CAL FEE TRA	Calculated feed tray	----
	CAL MIN REF	Calculated minimum reflux ratio (RR)	----
	CAL MIN STA	Calculated minimum number of stages	----
	CAL REF	(PER MIN) * (CAL MIN REF)	----
	CAL STA	Number stages at specified RR	----
◊	DEL	Column pressure drop	----
◊	PER MIN	Percent of minimum reflux ratio	----
◊	PRE TOP	Column pressure at top	PSIA
◊	REC BOT	Heavy key bottom product/heavy key feed	----
◊	REC TOP	Light key top product/light key feed	----
	TEM COO	Temperature of cooling fluid	R
	TEM HEA	Temperature of heating fluid	R
	TOT	Flag to denote condenser type	0 = Partial 1 = Total

STReam **MAN**ipulator

	CAL MOL	Calculated value per LBMOL of input stream. For HEA VAL option, the calculated value is the heating value in BTU; when STR MAN is used to modify stream component flowrates, the calculated value corresponds to the total flowrate of the modified stream (i.e., second outlet stream) in LBMOL/HR.	VALUE/LBMOL
	CAL SCF	Calculated value per SCF of input stream. The description of the calculated value is the same as for CAL MOL.	VALUE/SCF
◊	FAC (i)	Factor by which "ith" component is to be ADDed SUBtracted, MULTiplied or DIVided.	----

VALve

◊	DEL	Pressure drop across valve	PSI
◊	PRE OUT	Outlet pressure	PSIA
◊	TEM BUB	Temperature for specified PRE OUT at BUB PT	R
◊	TEM DEW	Temperature for specified PRE OUT at DEW PT	R

STReam properties

	CP IMM	Heat capacity at constant pressure for immiscible portion of stream	BTU/LBMOL/R
	CP LIQ	Heat capacity at constant pressure for liquid portion of stream	BTU/LBMOL/R
	CP VAP	Heat capacity at constant pressure for vapor portion of stream	BTU/LBMOL/R
	CV IMM	Heat capacity at constant volume for immiscible portion of stream	BTU/LBMOL/R
	CV LIQ	Heat capacity at constant volume for liquid portion of stream	BTU/LBMOL/R
	CV VAP	Heat capacity at constant volume for vapor portion of stream	BTU/LBMOL/R
	ENTH	Total stream enthalpy	BTU/HR
	ENTH IMM	Enthalpy of immiscible portion of stream	BTU/HR
	ENTH LIQ	Enthalpy of liquid portion of stream	BTU/HR
	ENTH VAP	Enthalpy of vapor portion of stream	BTU/HR
	ENTR	Total stream entropy	BTU/LBMOL/R
	ENTR IMM	Entropy of immiscible portion of stream	BTU/LBMOL/R
	ENTR LIQ	Entropy of liquid portion of stream	BTU/LBMOL/R
	ENTR VAP	Entropy of vapor portion of stream	BTU/LBMOL/R
◊	FLO	Stream flowrate	LBMOL/HR
◊	FLO COM (i)	Flowrate for "ith" component	LBMOL/HR
	FLO IMM COM	Immiscible component flowrate	LBMOL/HR
	MOL WEI	Stream average molecular weight	----
	MOL WEI IMM	Molecular weight of immiscible portion of stream	----
	MOL WEI LIQ	Molecular weight of liquid portion of stream	----
	MOL WEI VAP	Molecular weight of vapor portions of stream	----
	NUM PHA	Number of phases	----
◊	PRE	Stream pressure	PSIA
	REI VAP PRE	Reid vapor pressure	PSI
	SUR TEN	Surface tension of liquid portion of stream	DYNES/CM
	SUR TEN IMM	Surface tension of immiscible portion of stream	DYNES/CM
◊	TEM	Stream temperature	R
	THE CON IMM	Thermal conductivity of immiscible portion of stream	BTU/FT/HR/R
	THE CON LIQ	Thermal conductivity of liquid portion of stream	BTU/FT/HR/R
	THE CON VAP	Thermal conductivity of vapor portion of stream	BTU/FT/HR/R
	VAP FRA	Molar vapor fraction	----
	VIS IMM	Viscosity of immiscible portion of stream	CENTIPOISE
	VIS LIQ	Viscosity of liquid portion of stream	CENTIPOISE
	VIS VAP	Viscosity of vapor portion of stream	CENTIPOISE
	VOL	Total stream volume at system temperature and pressure	FT3/HR
	VOL IMM	Volume of immiscible portion of stream at system temperature and pressure	FT3/HR
	VOL LIQ	Volume of liquid portion of stream at system temperature and pressure	FT3/HR
	VOL VAP	Volume of vapor portion of stream at system temperature and pressure	FT3/HR
	Z IMM	Compressibility factor for immiscible portion of stream	----
	Z LIQ	Compressibility factor for liquid portion of stream	----
	Z VAP	Compressibility factor for vapor portion of stream	----

GENERAL FLOWSHEET ENHANCEMENTS

New Library Component

Version 5.0 contains AIR as a component in the chemical component library. This addition will make it easier to model air and eliminate the extra step of specifying air by combining oxygen and nitrogen. Air may be specified with component number 99. The user should be aware that if air is specified as a single component it will not be possible to model situations where the components of air are involved in a separation or reaction.

Example:

```
GENeral
    COMponents = 99
```

Water Saturation

Feed streams to a flowsheet can now be automatically saturated with water. The method for determining water saturation will be consistent with the thermodynamic commands specified in the GENeral section. Use GENeral section keyword command:

SATurate FEEds WATer = n1,n2,n3....

where n1,n2,n3 = feed stream numbers

Note: This feature may only be used when water is immiscible.

Thermodynamic and Physical Property Options

Version 5.0 includes the following new thermodynamic and physical property methods.

ENTHALPY and Mix Rule Methods

DESIGN II General Section keyword commands

LEEMOD	This method was developed for petroleum applications and is based on the Johnson and Grayson method as modified by Lee and Kesler (1). It is a simpler equation and likely to be less accurate than the Johnson and Grayson method.
MIXRUL=4	Specifies Lee and Kesler (2) method to determine critical properties of mixtures.

API Viscosity Method Update

Version 5.0 has updated its API viscosity method to reflect the updated methods in the fourth edition of the API Technical Data Book.

DESIGN II Keyword Command

VIScosity = MODAPI Specifies revised API method for liquid and vapor viscosities (3).

API Vapor Thermal Conductivity Method

In order to provide the most accurate results possible, DESIGN II has changed some of its methods for calculating vapor thermal conductivity. Pure component vapor phase thermal conductivities are calculated using the API method (4) and thermal conductivity for vapor mixtures are calculated by the Wassijewa equation (5). This modification is in effect when the following thermal conductivity method is specified.

THErmal CONductivity = TEMA new, TEMA Old, or API

Enhancements to Simulation Output

Viscosity Units

The available viscosities units have been expanded to allow the user to have results reported in more familiar units. The available keyword descriptors for viscosity units are reported below followed by their common name in parenthesis.

Dynamic viscosity	Kinematic viscosity
CP (centipoise)	CS (Centistokes)
POISE	FT2/S
LB/FT/S	SUS (Saybold Universal Seconds)
KG/M/S	SFS (Saybold Furol Seconds)
NS/M2 (Newton Seconds/M2)	RED1 (Redwood No. 1 Seconds)
PAS (Pascal Seconds)	RED2 (Redwood Admiralty)
	M2/S

To select any of the above viscosity units use the General section keyword command VIS UNI OUT = followed by the selected viscosity unit keyword. Example:

VIS UNI OUT = RED1

User Specified Decimal Places

Version 5.0 allows the user to specify the number of decimal places reported in the detailed stream print and the stream summary sections of the output. This is done by using the GENeral section keyword command DECimal STReam = . This command gives the user the ability to control the decimal printout of component flows, mole percents, and K values. The maximum number of decimals that can be specified is 10, the default is 5. Example:

DECimal STReam = 2

Petroleum Stream Reports

Version 5.0 contains two changes to petroleum stream reports. First, the Reid vapor pressure is printed by default for all streams for which the Reid vapor pressure calculation was requested. Second, it is now possible to print petroleum stream reports even when there is not a CRUde section defined in the input. This makes it more convenient to obtain petroleum stream output information using the PETroleum STReam = command. (see DESIGN II User's Guide p. 7.4.3)

132 Column Stream Summaries

Version 5.0 allows the user to specify 132 column stream summaries. This option is selected by specifying the GENeral section keyword command PRInt WIDe.

Additional Stream Summary Data

To offer a more complete set of stream property information, the stream summary will now report the stream density, specific gravity, and the volumetric flow rate for each phase of a two phase stream. For two phase streams the stream density is reported for the vapor phase, the specified gravity is for the liquid portion.

The user also now has control of the streams which appear in the stream summary and the order in which they are printed. Use the GENeral section keyword PRInt SUMmary = .

Example:

PRInt SUMmary = 901, 450, 451, 37

or

PRInt SUMmary = NONE

References

1. Lee, B. I. and Kessler, M. G., "Improve Predictions of Enthalpy of Fractions". *Hydrocarbon Processing*, Volume 55, No. 3, pp 153-158, 1976.

2. Lee, B. I. and Kessler, M. G., "A Generalized Thermodynamic Correlation Based on Three Parameter Corresponding Stats", *AICHE Journal*, Volume 21, No. 3, pp 510-527, 1975.

3. American Petroleum Institute, *Technical Data Book - Petroleum Refining*, Chapter 11.

4. American Petroleum Institute, *Technical Data Book - Petroleum Refining*, Chapter 12.

5. Reid, R. C., Prausnitz, J. M., and Sherwood, T. K., *The Properties of Gas and Liquids*, Chapter 10, 3rd Edition,1977.

CHEMTRAN ENHANCEMENTS

High Pressure Non-Ideal Thermodynamics

Overview

Choosing an appropriate thermodynamic method to adequately predict vapor liquid equilibria for high pressure non-ideal systems has in the past presented difficult tradeoffs. An activity coefficient method can model liquid phase behavior well but does a poor job in the vapor phase, conversely, an equation of state method can predict the vapor phase well but does a poor job modeling non-ideal liquid phases. Making a choice has always been a compromise.

ChemShare's DESIGN II Version 5.0 and ChemTran Version 15.0 includes a new equation of state method that predicts the liquid phase with the accuracy of the activity coefficient method. This method is a ChemShare modified Peng-Robinson equation of state based on the work of Stryjek et al. (see page 11).

For a complete description of this method, see page 6.

When ChemTran is Required

ChemTran is always required when using the modified Peng Robinson equation of state. See page 8 for details of ChemTran keyword commands.

Electrolyte Thermodynamics

Overview

DESIGN II Version 5.0 and ChemTran Version 15.0 provide new electrolyte thermodynamics which will extend the range of chemical systems for which ChemShare simulation software can be applied. Electrolytes solutions differ from other solutions because of the presence of ions created by dissociation reactions. Ammonia in water is an example of an electrolyte solution.

For a complete description of this method, see page 24.

When ChemTran is Required

Electrolyte Thermodynamics require ChemTran when the electrolyte system being modeled includes ions, reactions, and solutes not present in the DESIGN II data banks. Please refer to Table 3 (page 31), Table 4 (page 31), and Table 5 (page 32) to determine if data for your ionic system is included in the DESIGN II data banks. If you determine that ChemTran is required, see ChemTran keyword instructions on page 26 for full details on using ChemTran to enter the required data.

UNIFAC Update

Overview

ChemTran Version 15.0 now includes group volume (R_k), surface parameters (Q_k), and interaction parameters (a_{mn} and a_{nm}) for Liquid-Liquid equilibria prediction. See page 37 for complete details on this method and keyword descriptions. ChemTran Version 15.0 additionally includes revised UNIFAC parameters for Vapor-Liquid equilibria prediction. See page 51 for complete details on this method and keyword descriptions.

Physical Property Output

The latest release of ChemTran allows the user to obtain a print out of the physical properties contained in the ChemShare component library.

ChemTran Keyword command

PRInt PROperties

The PRInt PROperties command will print out the ChemShare component library properties for all components in the COMponents list.

ChemTran Example Input

```
AB123.
* PRINT PROPERTIES
COM = 41
PRInt PROperties
END
```

Note: For clarity, keywords are shown with their complete spellings using capitals and lowercase letters. Only those letters shown in CAPitals are actually required by DESIGN II.
If complete keywords are used, they must be in all CAPITALS as DESIGN II is case sensitive and will not accept lowercase letters in input files.

ChemTran Example Output

```
************  SUMMARY OF SINGLE COMPONENT PROPERTIES  ************

*****************************************************************
TOLUENE                  NO.   1            COMPONENT NO. IS   41
*****************************************************************
 CHEMICAL FORMULA:  C7 H8
-----------------------------------------------------------------

                    C
                   = -
                  C   C
                  -   =
                  C   C
                   = -
                    C
                    -
                   CH3
```

PROPERTY FOR GENERAL DATA	VALUE OF PROPERTY		METHOD OF DETERMINATION
MOLECULAR WEIGHT	92.134		DATABASE
NORMAL BOILING POINT	231.13	F	DATABASE
CRIT TEMPERATURE	609.53	F	DATABASE
CRIT PRESSURE	587.84	PSIA	DATABASE
CRIT VOLUME	5.0613	FT3/LBMOL	DATABASE
CRIT DENSITY	0.19758	LBMOL/FT3	1.0/VC
CRIT COMPRESSIBILITY	0.25933		CALCULATED
DENSITY FACTOR	0.25933		DATABASE
ENTHALPY FACTOR	0.25933		DATABASE
SOLUBILITY PARAMETER	8.9150	(CAL/CM3)1/2	DATABASE
ACENTRIC FACTOR	0.25910		DATABASE
VAP PRESS AT TB	14.696	PSIA	DATABASE
AT .85*TC	177.37	PSIA	DATABASE
AT TC	587.84	PSIA	DATABASE
LIQUID VOLUME AT TB	1.8711	FT3/LBMOL	DATABASE
LIQUID DENSITY AT TB	0.53444	LBMOL/FT3	1.0/V
CHAR VOLUME	0.23755	FT3/LBMOL	DATABASE
IDEAL GAS HEAT CAPACITY AT 500 K	40.397	BTU/LBMO/R	DATABASE
LATENT HEAT AT TB	14187.	BTU/LBMOLE	DATABASE

PARAMETERS FOR TEMPERATURE DEPENDENT EQUATIONS

PROPERTY	EQUATION	PARAMETERS	UNITS
VAPOR PRESSURE	LNPR	C1 = 0.00000	R, PSIA
		C2 = 1.5569	
		C3 = 0.50904	
		C4 = 0.00000	
		C5 = 2.9247	
		C6 = 0.00000	
LATENT HEAT	L	C1 = 14187.	R, BTU/LBMOLE
		C2 = 690.80	
		C3 = 1.0000	
IDEAL GAS HEAT CAPACITY	T**3	C1 = -8.2130	R, BTU/LBMO/R
		C2 = 0.74206E-01	
		C3 = -.25401E-04	
		C4 = 0.32922E-08	
		C5 = 0.00000	
		C6 = 0.00000	
SURFACE TENSION	SIG0	C1 = 66.811	DYN/CM
		C2 = 1.2465	
		C3 = 0.53439	

LIQUID VISCOSITY	LOG(VIS)	C1 = 870.52	R, CP
		C2 = -2.1771	
		C3 = 0.93777E-03	
		C4 = -.71121E-06	
		C5 = 0.13935E-01	
		C6 = 0.90368	
LIQUID THERMAL CONDUCTIVITY	LOG(TC)	C1 = 611.70	R, BTU/FT/HR/F
		C2 = -4.0030	
		C3 = 0.47515E-02	
		C4 = -.28081E-05	
VAPOR THERMAL CONDUCTIVITY	LOG(TC)	C1 = -338.35	R, BTU/FT/HR/F
		C2 = -2.0039	
		C3 = 0.80176E-03	
		C4 = -.20627E-06	

See the ChemTran User's Guide, Section 3, for more information regarding equation forms for each of these properties.